University of
South-Eastern Norway

www.usn.no

FMH606 Master's Thesis

Pilot Design of a Bioelectrochemical MES Wastewater Reactor

MT-12-19

Faculty of Technology, Natural sciences and Maritime Sciences
Campus Porsgrunn

Course: FMH606 Master's Thesis, 2020.

Title: Pilot design of a bioelectrochemical MES reactor.

This report forms part of the basis for assessing the student's performance in the course.

Thesis ID: MT-12-19 **Availability:** Classified

Participant: Mahedi Hasan Ibna Saif

Supervisor: Carlos Dinamarca

Rune Bakke

Summary:

The reject water of any wastewater treatment plant (WWTP) contains carbon dioxide (CO_2) and micro-organisms. The environmental biotechnology research group of the University of South-Eastern Norway (USN) is trying to develop a sustainable pilot reactor for reducing CO_2 and upgrading biogas by implementing Microbial Electrosynthesis (MES). The study of an MES reactor is the main purpose of the thesis. MES method is capable of producing more energy-rich methane by reducing CO_2. This method needs to grow biofilm at the biocathode and supply of electricity. A bioelectrochemical reactor is designed and needs to integrate into an existing AD biogas process. A designed MES reactor should be economically feasible and efficient for execution. In the design, dimensions, parameters, maintenance, safety, and selection of material are discussed and drawn in 3D. The breakeven point is calculated in terms of capital expenditure (CAPEX). The efficiency of the pilot design is compared with the experimental reactor.

The pilot reactor is designed with SS 316 material for vessel and electrodes with a total cost of 4.24 million NOK. The methane production rate is 119 m^3/day and the breakeven point is about 8 years. These make this project feasible for commercial use.

Preface

This thesis paper is in fulfillment of a partial requirement to achieve a master's degree in Process Technology at the University of South-Eastern Norway from the Energy and Environment Technology department. This is a continuous study from a previous preliminary design project to a pilot design for a more understanding and accurate design of an MES reactor. Integrating a full-size pilot MES reactor is a new idea to existing WWTP. There is many literature available about the experimental scaled reactor. Carbon-based electrodes are very popular due to good columbic efficiency but in the pilot reactor, new material is used as electrodes.

This thesis paper is focused on bioelectrochemical reactor design, economics, efficiency, and discussions on the designed reactor. The thesis work needs some knowledge in different engineering disciplines and economics. Appendix A contains the task description for the thesis work. The structure of the report is followed by the USN standard template. The report is completed with the help of different software programs such as Microsoft Office 2016, SolidWorks 2018, PhotoScape, Grammarly, Snipping Tool, and EndNote X9. There are a total of 9 chapters describing the thesis task and ends with reference and appendices. IEEE format is followed in the reference style.

I like to thank my supervisors Rune Bakke and Carlos Dinamarca for guidance, correction, and literature available on the thesis topic during the thesis period.

Porsgrunn, 29 May 2020.

Mahedi Hasan Ibna Saif

Contents

Figure list

Table list

Nomenclature

Abbreviations/expressions	**Explanations**
AC	Alternating Current
AD	Anaerobic Digestor
BES	Bioelectrochemical System
CAPEX	Capital Expenditure
CCE	Capital Cost Estimation
CEPCI	Chemical Engineering Plant Cost Index
CFD	Computational Fluid Dynamics
COD	Chemical Oxygen Demand
CSTR	Continuous-flow Stirred Tank Reactor
CA	Corrosion Allowance
CS	Carbon Steel
DP	Differential Pressure
DC	Direct Current
DET	Direct Electron Transfer
DIET	Direct Interspecies Electron Transfer
DPT	Differential Pressure Transmitter
EET	Extracellular Electron Transfer
Gt	Gigatonne
HRT	Hydraulic Retention Time
IEA	International Energy Agency
IET	Indirect Electron Transfer
IHT	Interspecies Hydrogen Transfer
MT	Material Tolerance
MES	Microbial Electrosynthesis System

MEC	Microbial Electrolysis Cell
MFC	Microbial Fuel Cell
MMGS	millimeter, gram and second
MPC	Model-based Predictive Control
MPR	Methane Production Rate
NDIR	Non-distributive Infrared Spectroscopy
NHE	Normal Hydrogen Electrode
OPEX	Operational Expenditure
PBR	Packed Bed Reactor
PFR	Plug Flow Reactor
PFR	Plug Flow Reactor
PtG	Power to Gas
PM	Preventive Maintenance
Pt	Platinum
PV	Photovoltaics
R&D	Research and Development
RTD	Resistance Temperature Device
SS	Stainless Steel
SHE	Standard Hydrogen Electrode
TC	Thermocouple
TIC	Total Installation Cost
TIF	Total Installation Factor
UASB	Up-flow Anaerobic Sludge Blanket
uPVC	unplasticized Polyvinyl Chloride
USN	University of South-Eastern Norway
WWTP	Wastewater Treatment Plant

Unit of measurement	**Explanations**	**SI Unit**
atm	Atmospheric pressure	[Pa]
°C	Degrees Celsius	[°C]
MPa	Mega Pascal	[Pa]
mA	milli Ampere	[A]
mL	milli Liter	[l]
mm	milli meter	[m]
mol	Amount of substance	[mol]
ppm	parts per million	[ppm]
pH	Pondus Hydrogenii	[-]
Currency	**Explanations**	**Unit**
NOK	Norwegian kroner	[NOK]
USD	US dollars	[USD]
Greek letters	**Explanations**	**Unit**
ρ	Density	[kg/m^3]
π	Pi	[-]
Chemical compound	**Explanations**	
CO_2	Carbon dioxide	
CH_4	Methane	
H_2O	Water	

1 Introduction

Petroleum derived products and fuels will have a significant role till the near future because of its limited reserve and their industrious use characteristically bring about the creation of ozone harming substances, especially, carbon dioxide (CO_2). Around 32 Gt (Gigatonne) of CO_2 has been discharged each year from 2014 to 2016 according to the International Energy Agency (IEA) [1]. Numerous specialists have demonstrated enthusiasm for innovations that can bridle the remaining capacity to give an increasingly dependable and down to more reliable renewable energy source and at the same time have the option to capture the discharged carbon into the earth [2]. Carbon capture, removal, and other reduction strategies have increased a significant concentration in the R&D (research and development) divisions of numerous universities, research, and business institutions.

The share of renewable energy in the world has grown rapidly, driven in part by the sterling amount of research and engineering design development in the field of sustainable energy supply. The European Renewable Energy Council estimates that by 2020, 21% of the EU's total energy production will be renewable energy [3]. Some innovations, such as solar photovoltaics (PV), hydropower, and wind turbines, have rapidly expanded their benefaction towards the core welfare of sustainable energy sources and the creation of full power over the next few years. Solar PV and wind powers are the most used technologies for renewable power generation which increased their respective capacities by 32.9% and 12.7%, which is a 17.3% increment of the total non-hydro renewable power sector in between the years 2015 and 2016 [4]. Some European countries have exceeded the demand for electricity on certain days of the year as they rely on the dynamics of nature due to the changing nature of sunlight and wind stream and remain as an unstable source of renewable energy [5]. These advancements are profoundly reliant on nature and make them an undependable energy source from the endpoint view. Simultaneously, legislatures of numerous nations, particularly in Europe, have advanced severe guidelines on ozone harming substance emanations and in improving sustainable and renewable energy sources.

The electrochemical reduction of carbon dioxide is one of many methods nowadays being studied for carbon capture and production of methane (CH_4), which is also one of the most efficient ways [6]. Anaerobic digestion (AD) is a commonly used method for producing biogas, which can yield more biogas by using a wastewater treatment and a microbial electrosynthesis system (MES). More methane production is possible by reducing carbon dioxide through MES at biocathode. Incorporate the AD-MES system, introducing MES into the rejected water circle, as an innovative way to improve the efficiency and effectiveness of existing wastewater treatment plants [7].

1.1 Power-to-Gas technology

One of the most recent approaches to available renewable energy is power-to-gas (PtG) technology. PtG technology settles dependency issues and allows for a change to an increasingly stable one on metabolizing sources of energy. PtG technology can give various gases, which are reliable sources of energy with the expansion of electrochemistry procedures to methanogenesis. PtG technology converts excess electricity into life-rich gases, for example, hydrogen and methane that can be integrated into existing gas networks or used as fuel for vehicles or both storage and transport. Hydrogen is produced by bioelectrochemical processes, but methane is frequently supplied as a by-product and is optimal for other efficient problems than hydrogen, for example, storage and transportation [6]. PtG technology allows electrochemical units to sink carbon significantly and emit CO_2 for modern industries. It is possible through PtG technology to produce petroleum grade biogas without capturing CO_2 by using expensive processes, for example, amine scrubbing or pressure swing adsorption. The concept of electrochemical CO_2 reduction has been illustrated in various experiments under different conditions, for example, short-term testing, batch studies, bi-chamber system, and buffer nutrient medium. Electrochemical and AD studies can be integrated to provide more biogas from AD wastewater by showing two methods that occur in a single reactor [7].The main reason for converting biogas to automotive fuel is the purity (60% methane) when it differs from natural gas which is significantly higher than 85% methane and other hydrocarbon fuels [8]. The use of biofuel is increased by 56.13% and that of fossil fuel is decreased by 7.85% between 2016 and 2017 [9]. Thus, the focus has moved towards increasing innovative technology towards methane through the electrochemical process to reduce carbon dioxide using renewable electricity. The percentage of use of non-fossil versus fossil fuel ranged from about 24–26% from 2011 to 2016, respectively. Electricity is the most part of the non-fossil energy, which is generated by hydropower (96%), wind (1.7%), and thermal (2.3%) [10].

Government strategies towards carbon reduction, emission targets and improvements in electrochemical biogas using additional renewable electricity for transportation have similarly led various organizations to look for simple and low-cost carbon reduction innovations. The concept of electrochemical reduction converts carbon dioxide in anaerobic digestion reactors to an energy-rich methane mixture through an MES. A huge part of the research surrounding bioelectrochemical systems (BES) is where micro-organisms act as catalysts in electrochemical reactions on electrodes. Microbial fuel cells (MFC) are one of the most researched BES where bioanodes are utilized to treat wastewater and create electricity. MES is an altered representation of MFC. Due to the application of potential differences to complete non-spontaneous reactions such as CO_2 reducing various chemical products in the biocathode. At the same time, water gives hydrogen and oxygen to the microbial electrolysis cells (MEC) through the decomposition reaction with the help of electricity in a bioanode. Even after the immediate results of hydrogen from electrolysis, methane and other various biofuels are preferable due to problems such as storage, stability, and transport. From acetic acid, the micro-organisms can create a potential difference of about -0.30 V which is not enough to produce hydrogen at the cathode. Thus, an additional power supply is required at the cathode of about -0.42V for the evolution of hydrogen. Methane is then produced by reducing carbon dioxide with suitable micro-organisms and experimental conditions [11].

1.2 Electrochemistry in methanogenesis

Methanogenesis is the production or yielding of methane by an organism (methanogen). From the very beginning, methane yield was seen as an unintended consequence of electrolytic hydrogen production, electrochemical synthesis of acetate, and production of other chemical compounds. Various attempts were made to clear or block the pathways of methane formation. There were two methods of thermal shock and sodium bromoethanesulfonate in addition to preventing methanogenesis in MES to produce acetate and hydrogen. It was later recognized for supplying methane as an essential rich source of energy. The yield of methane along MES is a less expensive choice with the use of biocathode and general storage than hydrogen. Hydrogen has a low volumetric energy density (11 MJ/m^3), while in contrast to methane 36 MJ/m^3, it creates an irrational fuel to fill as a vital energy source methane, along this line, becomes a perfect fuel source that can be disposed of and it can be transported economically and especially for public transport. The integration of MECs with AD for methane production was developed by many researchers in the late 2000s as an alternative to biohydrogen production for reducing carbon dioxide and using less expensive electrode at low potentials. The electrochemical carbon dioxide reduction has two ways [11].

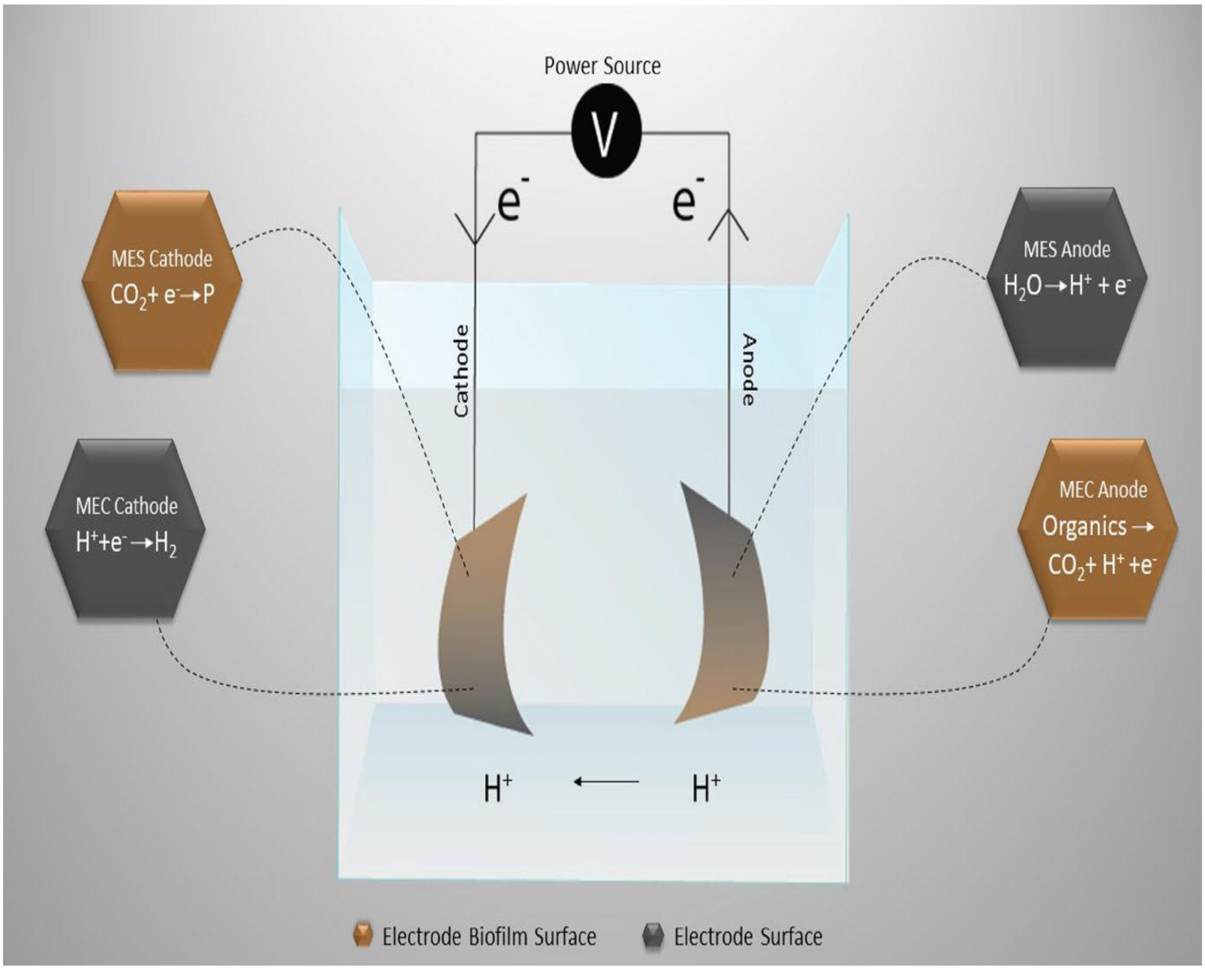

Figure 1.1: A conventional introduction of MES and MEC for the treatment of wastewater and CO_2 [11].

At the MEC,

1) Cathode:

$2H^+ + 2e^- \rightarrow H_2$ E = −0.414V vs NHE (R 1.1)

$CO_2 + 4H_2 \rightarrow CH_4 + 2H_2O$ (R 1.2)

2) Anode:

$CH_3COOH + 2H_2O \rightarrow 2CO_2 + 8H^+ + 8e^-$ E = −0.280V vs SHE (R 1.3)

At the MES,

1) Cathode:

$CO_2 + 8H^+ + 8e^- \rightarrow CH_4 + 2H_2O$ E = −0.244V vs NHE (R 1.4)

2) Anode:

$2H_2O \rightarrow O_2 + 4H^+ + 4e^-$ E = 0.820V vs SHE (R 1.5)

The ideal potential of reduction of CO_2 to CH_4 with the exchange of eight electrons in reaction (R 1.4) is below the ideal potential of electrolysis reaction of H_2 (R 1.1). Micro-organisms engaged with direct electron transfer would have a more noteworthy energy gain than organisms with indirect electron transfer, where hydrogen molecule goes about as a vessel for electron transfer. The methane yielding MECs can complete microbial reaction through interspecies hydrogen transfer (IHT) where hydrogen is not the final product, yet an electron carrier. The electrochemical rule expresses that a lower potential for the exchange of a specific amount of electrons is productive against the use of the higher potential for the exchange of the same amount of electrons [12]. Thus, the direct electron transfer of MES reaction (R 1.4), which utilizes a lower potential is ideal over the MEC cathode reaction (R 1.1). The electrochemical potential for acetate oxidation to bicarbonate and for the oxidation of water to oxygen is -0.28V and 0.82V vs SHE respectively [13]. The bioelectrochemical acetate oxidation (MEC) will be more acceptable than water oxidation (MES) which in any case increases the energy. It is very well seen that a system cannot produce combined reactions with such low potential. The combination of single-chamber MEC (SCMEC) and AD and SCMEC strengthen the electrons, available for both micro-organisms and nutrients, possibly improving the electron transfer and reducing the voltage. However, the theoretical potentials and the combined common losses, which maximize the absolute potentials for a significant increase in input power. The common losses are (a) the electrode surface overpotentials due to faulty acceleration of a chemical reaction [13], (b) resistive losses due to the conductivity of the electrolyte, which is one of the important parameters for estimation and flow for the scale-up of the system [14], (c) diffusion limitation due to the double layer formation of improper mixing of electrolytes. These create problems with hydroxyl ions, protons, electron transfer, and electrical efficiency for electrodes as well as the system [11,15].

1.2.1 Extracellular electron transfer (EET)

There are for the most part three methods by which methane can be created in an MES [16] : (a) acetoclastic methanogenesis from acetate, (b) hydrogenotrophic methanogenesis from hydrogen at cathode [17] and (c) direct electron transfer (DET) by omitting mediator hydrogen gas at the cathode [18]. Electron transfer can push in or out from the micro-organisms. Several studies are found on electron extraction from the micro-organisms moving to the metals and electrodes [19, 20]. However, electron transfer into micro-organisms is an interest of recent research like perchlorate reduction of bioremediation techniques [21] and more recently electro-methanogenesis of bioproduction [22]. Electron shuttles between electrodes and mediators are very important for indirect electron transfer (IET). There are some micro-organisms and their primary metabolites, which enable electron shuttles at anode [23, 24]. At EET cathode, hydrogen gas is very easy and available as an electron shuttle and gives various production pathways of many high energy bioproducts [25, 26]. Thus, the use of expensive cathode, low solubility, and high overpotential cause the process incompetent [27]. The production of hydrogen at cathode should be avoided by the application of an alternative way of EET. There are some electron shuttles that are researched widely. Even though these shuttle molecules effectively remove their destabilization but there are toxic consequences for micro-organisms on the application [28, 29]. Growing biofilm is the best way of EET at the cathode. The micro-organisms remain fixed on the surface of the electrode, which gives easy excess of direct electron transfer because of a long time in contact [30]. The biofilm method of EET improves efficiency as overpotentials and diffusional limitations decrease than hydrogen and shuttle based EET. Recent experiments found that this procedure can constrain hydrogen production due to biofilm action. [31].

1.2.2 Direct interspecies electron transfer (DIET)

There are many redox reactions, and interspecies electron transfer took place in a complex AD system [32]. For methanogenesis and sulphur reduction reactions, syntrophic communities (bacteria and archaea) help each other on metabolic abilities like thermodynamic barriers in high concentrations [33]. Methanogenic biofilm aggregation reduces the number of mediation steps, products, dependencies, and increases the process steadiness in DIET. This process has a huge impact on the modeling and design of the AD wastewater reactor and helps to understand the response of environmental interventions of the methanogenic community [34]. DIET through conductive pili was first called as nanowires [35]. The study also confirmed that the syntrophic methanogenic microorganisms are connected by flagellum like appendages not only can transfer electron indirectly but also other energy exchange processes [36]. DIET is capable of high current flow at low voltage through biocathode [37], CO_2 reduction [38], *Methanosarcina barkeri* [39], neutralize the system from impacts of acid and high hydrogen partial pressures [40] and increase the process efficiency [41]. Carbon cloth as conductive materials is the most efficient among carbon materials [42]. High surface conductive materials of cathode like granular activated carbon, carbon cloth, biochar, and magnetite can supply and help to transport electrons to and between micro-organisms, respectively. These biocathodes can save energy in the generation of conductive pill [11]. At 33 hours mark, methane production is three times higher in the electric-based AD system [43]. However, there are no clear details for the process of DIET with biocathodes and interspecies nanowire networks, but the efficiency of electric-based AD systems is improved by using DIET theoretically. There are available literature can be found on DIET in recent time.

1.2.3 Biocathodes

Bioelectrochemical energy generation processes are highly demanded research field due to the demand of renewable green energy. This demand and the cheapness make biocathodes the focus of recent research like bioanodes. There are several types of biocathode but biofilm-based biocathodes can give the highest process efficiency due to DET [44]. Biofilms were the first time used in hydrogen gas production at graphite felt biocathode by converting bioanode [45]. In 2010, the reduction of CO_2 was performed successfully for the first time at a graphite block cathode [46]. Graphite geometric surface area was increased due to modification to grow more biofilm at the cathode. When *G. sulfurreduccens* is supplied in a two-chamber acetate MEC with constant voltage +0.50 V at the anode, the acetate oxidation and the biomass (microorganisms inoculated) are linearly related. These results prove that electron transport directly proportional to the biomass growth of the biofilm [47]. Biofilm improvement is a key area of research for biocathode advances, as it stabilizes the Micro-organism enhancing over the Electrode material and hence the electron transfer proficiency through DIET. There are some reasons for biofilm growth and strong attachment with the electrode surface such as hydrogen bonding, electrostatic attraction, and van der Waals interaction [11]. In microbial electrosynthesis, mixed cultures of micro-organisms are preferable than that of pure culture [48]. Graphite, carbon plate, and carbon cloth electrode materials were utilized for MES however they have two-dimensional structure surface. CO_2 reduction process can give different products on different cathode potentials applications at biocathode (carbon felt) [49].

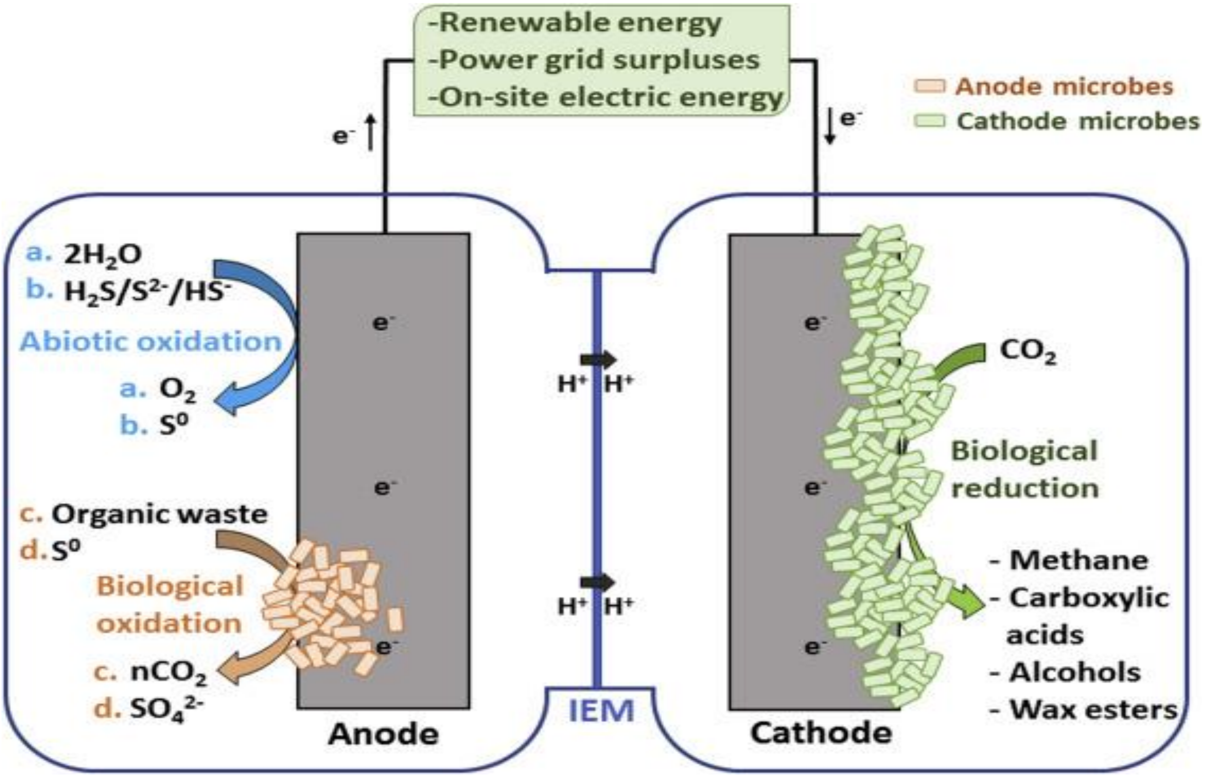

Figure 1.2: Applications of MES to reduce carbon dioxide to methane at biocathode [50].

1.3 Pilot AD-MES integration overview

Upgrading of biogas can be done by the treatment of reject wastewater by AD-MES integration in wastewater treatment plant (WWTP). The sludge and the wastewater influent into the sedimentation tanks after a series of pre-cleaning processes. Then, the treated reject wastewater and sludge go for the next level of separation. The sludge is pumped into a biogas (AD) tank from the sedimentation tank. Biogas is collected from the top of the biogas tank after the AD process. The digested sludge goes to a centrifuge for the separation into solids and a liquid fraction (reject wastewater). The solid cake of sludge removed as fertilizer. Normally, the reject wastewater recycled in the inlet feed of the biogas tank, in many cases which causes instabilities in the main treatment line. Therefore, a necessity to reject wastewater treatment comes after centrifuge separator and before the inlet feed of the existing biogas tank as shown in Figure 1.3. This will increase the quality of reject wastewater by reducing chemical oxygen demand (COD), ammonium, and sulphide concentrations. It will reduce the use of freshwater, variations in main treatment, upgrade the biogas to methane by reducing carbon dioxide through MES. The AD-MES integration to reject wastewater does not interfere with existing infrastructure, no requirement of extra feed, and adds more value (methane) than requirements [7].

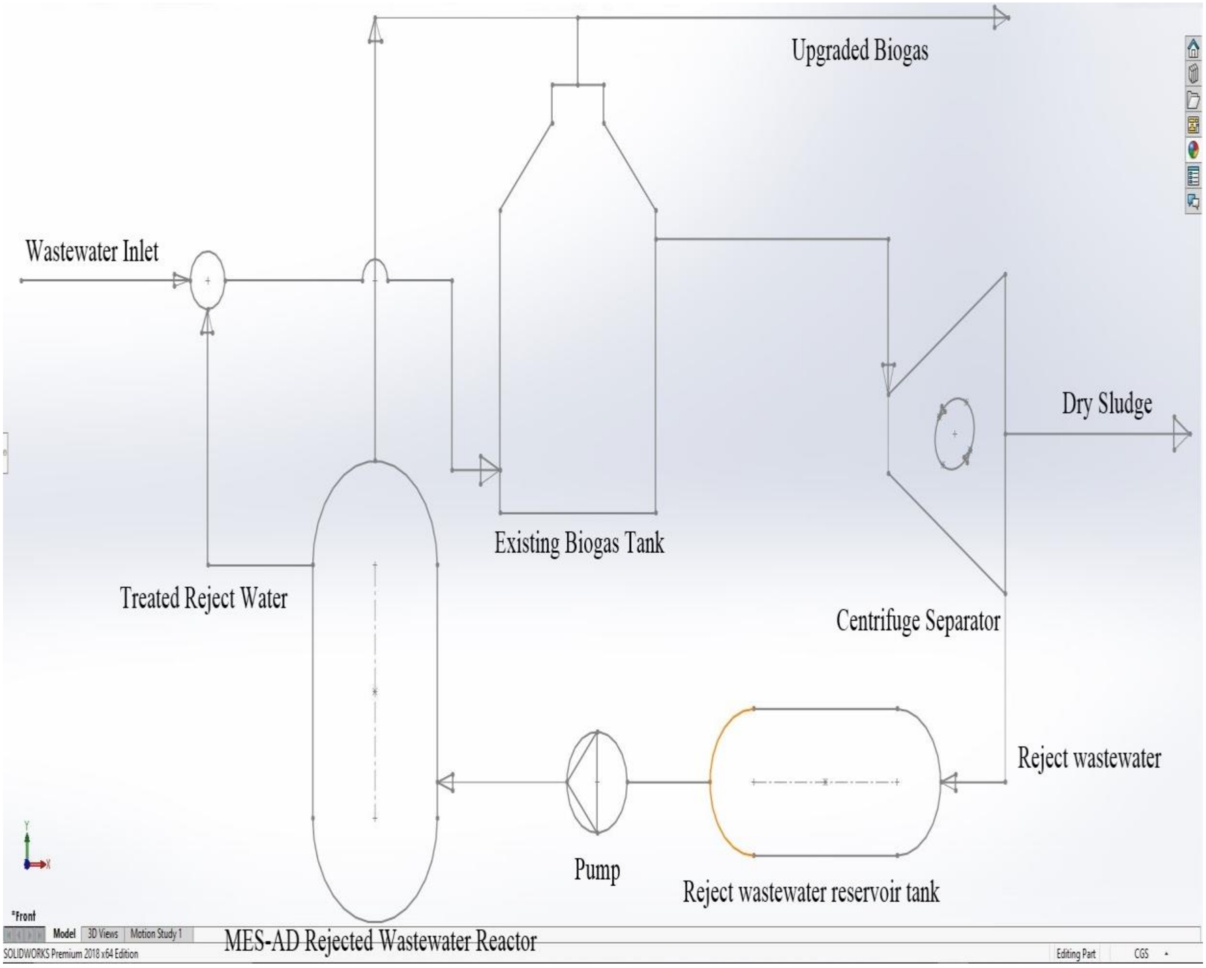

Figure 1.3: Pilot AD-MES integration of reject wastewater placement in a WWTP (2D SolidWorks 2018).

1.4 Objectives and scope

MES technology is a combination of electrical, environmental, chemical, and mechanical engineering disciplines. Reduction of carbon dioxide by increasing methane content in biogas through the power to gas technology via direct interspecies electron transfer at the biocathode is one of the major focus of this thesis. This thesis is the continuation project from last year's preliminary AD-MES integration process reactor design for reject wastewater. Further comprehension of continuous pilot level testing is needed to assess the general capabilities of this concept, which will give more economical and environmental advantages. From other perspectives (e.g. power supply and experimental works), parallel collaboration with various branches in this topic is underway for the development of biogas, a further percentage of methane production through MES of rejecting wastewater treatment. This is a new technology compared to others and difficult to find detailed literature reviews. The main objectives of this task are:

1) Determine process design parameters for an MES solution at an existing AD plant.
2) Reactor design (dimensioning and 3D drawing) with electrodes orientation and suitable materials based on material science and practical use.
3) Cost estimation for the pilot project of the reactor.
4) Determine the energy efficiency, potential benefits of AD-MES integration, and process optimization of the designed reactor.

Objectives and task descriptions in detail are given in Appendix A.

There are so many scopes in this thesis, which includes the type of material used for AD-MES reactor, reactor types, the requirement of pump power, the volume of the reactor, surface area of electrodes, orientation of reactor and electrodes inside the reactor, different types of instruments for running the process optimally, cost estimation to find out the break-even point and the feasibility of the project for the commercial purpose. Because AD-MES integration nowadays is one of the most demanding parts of the research because of the high efficiency and others.

2 Methods

Nowadays food waste or wastewater treatment has become one of the main sources of enriching energy compounds like biogas. Since then, environmentalist countries such as Norway have spent large sums of money on research and experimentation with such renewable energy at various universities and institutes. The University of Southeastern Norway (USN) has a research group on environmental biotechnology under the Faculty of Technology, Natural Sciences, and Maritime Sciences. The main focus of this research work is to design and cost-evaluate of a bioelectrochemical reactor to determine the feasibility of a pilot project. It contains literature and technical data from various disciplines studied to improve the quality of biogas production by increasing the concentration of methane. AD-MES integration will reduce CO2 using DIET at the biocathode. After selecting the thesis topic, the content of the project is discussed for the development of an existing AD plant on a practical basis through reactor design from preliminary to pilot design. Important methods of inspecting existing AD plants, lab work, and related online process flow videos were experienced for the task. After discussing the advantages and disadvantages, the planned thesis work was completed through an investigation of various reactor systems, electronic components, and orientation design. During the design work, different standards and academic teaching are followed. The design is executed in 3D drawing software such as Solid Works (2018) and stainless steel (SS) as electrode material.

Due to the electrode material and orientation changes, the dimension calculations of the reactor, electrodes, and other parts are changed along with the location of the pipe fittings and the sensors, excluding last year's project work. Detailed price analysis is one of the most important factors for any type of theoretically designed furnace to be effective. The project stages of any chemical and processing plant are feasibility study, concept study, pre-engineering research (involving all branches in basic engineering), and final execution (detailed engineering). A feasibility study is an assessment of the practical ability to effectively estimate the feasibility and feasibility of completing a project with every single important factor (economic model and technical model). The concept study is the screening of operational capabilities (feeds and products) and process technologies (MES). This investigation will lead to a pre-engineering study. Pre-engineering concentration, in most cases, includes all branches, technical details and there are no restrictions. Execution is the installation and commissioning based on other studies. The requirements of this thesis are described in the thesis for the pilot design of the reactor in the light of these studies. Typically, the final part of the framework of this report that determines the designated costs was an investigation of project management and cost engineering. Expenditure investigations similarly point to a return on the initial investment, which is a breakeven point for the use of this reactor. Since the theoretical reactor has not been introduced, there is a level of improvement through further research and a logical approach to future practical reactors.

3 Process specification

Different process specifications are required for the selection of equipment, materials, and piping are required for AD-MES integration. Before the design, it is very important to define all the specifications related to the equipment, materials, and plumbing of the reactor. These specifications are also helpful in determining the cost of the project. These parameters are equally significant for the design and cost of any project. It is very important to know the parameters before designing and spending. Thus, the details of the process specification and the parameters of this reactor are discussed in this chapter.

3.1 Reactor specification

Generally, five types of reactor designs that are commonly used in the relevant types of research for waste treatment and biogas production for full-scale processes. These are batch, continuous flow stirred reactor (CSTR), plug flow reactor (PFR), packed bed reactor (PBR), an up-flow anaerobic sludge blanket (UASB) reactor. A batch reactor design is simple, performs controlled reactions, and flexible. However, the batch reactor is useful for laboratory tests but not as desirable as actual because of the processing unit in a continuous process [51]. CSTR is good for steady-state operations, exothermic reactions, temperature control, and large-scale reactions [51, 52, 53]. During high contact time of reaction of this reactor, additional energy is required to excite the reaction and the combination of products come short. The proposed reactor of AD-MES requires a very high rate of response to the reaction with a good product combination. PFR is an uninterrupted flow pipe performed in a stable condition and no energy is required to excite the reaction [52]. There is a small possibility in mixing products, operating conditions are complex, and it is not good for the high viscous reactants to flow through pipes due to high chance of pressure drop. A special version of PFR may be used in AD-MES systems. PBR is used in treating liquid and reactants in interaction with solid surfaces. Another name for PBR is gas-solid PFR and two columns may be used for uninterrupted flow. UASB is a special type of bioreactor for AD that is configured on the PFR principle [53]. In this UASB reactor, three phases (solid, liquid, and gas) are interacting and can be separated. The designed reactor is typically in the shape of a vertical cylinder with a flow from the bottom to the top. This concept makes the design cost-effective and compact. With the use of prepared granules, long start times can be reduced. For AD-MES, a PFR reactor with some of the design elements of PBR and UASB is chosen for the design to obtain an effective solution. The wastewater is a mixture of liquid and fine solid particles and the output product is biogas, so a vertical flow, the three-phase process where the MES electrodes can be regarded as a fixed bed, is assumed to be an appropriate design.

3.2 Instrument specification

Instrumentation is key to running the operation effectively. In the case of automation, instrumentation plays an important role in managing a process. When there are certain constraints and conditions for getting the best results from a process, it makes it easy to control those parameters by observing. The integrated MES reactor has a number of parameters for obtaining the optimal amount of methane from rejected wastewater. There are some sensors, which are used in reactor design. The calculation of efficiency becomes easier with the help of sensor reading. The correct position of the sensors is also important in the reactor design. To observe the data coming from the sensor, a data interface is necessary. Datalog tool software is also important for an ongoing process or experiment for analysis. The use of the controller is very effective for a process. The controller can adjust the required value of any parameter automatically. For example, a temperature controller can open or close a heat-exchanger to adjust the temperature inside the reactor after getting reading from the temperature sensor. Likewise, there should be pressure and flow controllers to control pressure, flow, and level inside the reactor. Details of some of the sensors that need to be used in the reactor are given in Table 3.1.

Table 3.1: Different types of sensors used in the reactor and their description.

Instruments	Suggested model	Working principle and placement
pH sensor	Endress+Hauser's Orbipac CPF81D	This sensor uses Memosens technology and glass electrodes and is specifically designed for wastewater treatment [54]. It measures the acidity or alkalinity of wastewater in the form of numbers from 0-14. The neutral value of the fluid is 7. There are two sensors used in the inlet and outlet of the reactor to monitor the influent and effluent pH range of the reactor.
Temperature sensor	Resistance temperature device (RTD)	The most used temperature sensor is the RTD Pt 100. It measures temperature changes proportionally with changes in resistance. Platinum (Pt) metal is used in these sensors. At 0° C, PT has a resistance of 100 Ω (ohm). The conversion factor is 0.00393 Ω / ° C [55]. Like the pH sensors, two sensors are placed at the inlet and outlet of the reactor to monitor and if needed to maintain the operating temperature.
Pressure sensor	Differential pressure transmitter (DPT)	Gauge pressure or absolute pressure can be measured with DPT cells. These pressures are related to vacuum and atmospheric pressures respectively. DPT cell is placed on the top and measured the internal pressure of the reactor because the biogas always moves upwards. May detect clogging if pressure increases and used to operate the reactor at elevated pressure.
Level sensor	Capacitive level sensor	This sensor is applicable for solids, liquids, organic liquids, and slurries. This sensor uses a radio-frequency signal in a capacitance circuit, has no mechanical part, and can place outside of the reactor wall. The sensor needs to be adjusted according to the dielectric constant of the fluid; this is the charge that the fluid can absorb

		[56]. It can be fitted on the opposite side of the center point of the outlet pipe.
Flow sensor	Magnetic flow meter for liquid and DPT for gas	The magnetic flow meter is good for wastewater treatment. The principal of Faraday's law of electromagnetic induction determines the flow of fluid in a pipe. It converts the flow of fluid through the magnetic field into the voltage [57]. The flow sensor is in the inlet pipe to control the flow valve or feed pump The flow of biogas can be measured using DPT following Bernoulli's equation and the location is in the gas outlet pipe.
Quality sensor	IR Multi-Gas Sensor NDIR Module	The basic principle of this sensor is non-distributive infrared spectroscopy (NDIR). It can measure CH_4 (1000-20000 ppm), CO (500-5000 ppm), and CO_2 (500-10000 ppm). The operating temperature is 0-50° C, which is within the range of MES reactor operating conditions [58].

3.3 Pump specification

There are three main points for choosing one type of pump and they are: a) process requirements, b) design parameters, and c) characteristics of the pumped medium. At times, pump selection is governed by some firm requirements for different process parameters. Unlike piston pumps, centrifugal pumps can provide a uniform and continuous flow of pumped media, which may be a requirement for the MES reactor process. The properties of the pumped medium often become an unambiguous factor in pump selection. Different types of pumps are reasonable for providing different media contrast viscosity, toxicity, friction, and different parameters. For example, the corrosive properties and physical phase of the pumped medium determine the design materials and degree of air-tightness of the pump respectively. The operational prerequisites indicated by different processes can be met by different types of pumps. The type of pump that matches to the most perfect quantity of key design parameters (capacity, head, and power), it is better to use that pump in that process. The designed height parameter of the reactor is less than 10 m and the flow rate is 10 m^3/h, therefore, the minimum required power for a pump is 273 W (including safety calculation at max values of all quantities), which is suitable for the single-stage centrifugal pump that can be used in MES reactors. The power calculation is shown in Appendix B [59].

3.4 Electrode specification

The electrode material is one of the essential parts MES as the biocatalyst, which controls the electron transfer through the growth of biofilm. MES requires Biocompatible terminal materials with sufficient surface area to volume ratio, which can bolster the compelling improvement of microbial biomass at high current densities to produce a significant amount of methane from CO_2. However, the practical application can be expensive due to electrodes materials. Carbon-based materials are the most used in experimental work until today. They are expensive and structurally weak, so alternatives are proposed here. The high biofilm growth and high relative plenty of cell-bound polymeric filaments led to low charge transfer resistance, as controlled by electrochemical impedance spectroscopy [60]. A wide assortment of the physicochemical parameters of the supporting carbon electrode materials such as electric conductivity, explicit surface zone, porosity, thermogravimetric mass spectrometry, and so on, have been applied for getting a preferable electrode [60]. Stainless steel is an inexpensive candidate among other electrode material but it has low cell interaction, which is one of the causes for low performance. The problem can be resolved through hybridized curli nanofibers combined with a metal-bonding space integrated onto the steel surface, which gave effective cell bonding with the SS electrode [61]. The approach is also helpful for the improvement of the power output of anode and increases the coulombic efficiency over 80% in the cathode with a SS electrode at a low cost [61]. SS mesh cathodes were studied as a technique to give higher surface area material than flat plate electrodes. A certain size of mesh has three times bigger electrochemical active surface area than a flat sheet, which is found in cyclic voltammetry tests [62]. The performance of the SS mesh electrode is like that of the linear sweep voltammetry at low current densities with the MEC tests [62]. Given the high strength and relatively low cost, SS was chosen electrode material in the MES design here.

3.5 Process control parameter

A quantity that is constant for a process by a design requirement is called process parameters. Model-based predictive control (MPC) is an advanced control technique to determine optimal operation. MPC estimates the state (inputs) through running a simulation at ahead of time alongside the real model or process. The parameter values come to form the sensor readings. Therefore, parameters need to determine before designing the reactor as like as for optimal operation through experiments and researches. The required parameters are given below based on different case studies similar to MES reactor operations from the lecture of FM1015-1 18H Modelling of Dynamic Systems at USN. The characteristic parameters of the designed reactor are the rate of input and output flow of wastewater and the amount of wastewater inside the reactor. The hydraulic retention time (HRT) inside the reactor is an important parameter, as it affects the size of the reactor. There are other parameters, they are given in Table 3.2 with values. Operational parameters such as gas production and produced gas composition are also used in MPC but these are not constant and not directly included in the design.

Table 3.2: Different parameter values of the design reactor [7, 63].

Parameters	Values
HRT	3 h
Wastewater volume	30 m^3
Flow rate (inlet and outlet)	10 m^3/h
Temperature	35° C
Wastewater density	994 kg/m^3

pH range	6.8 to 8.5
Inside pressure	101325 Pa
Supply current range	0.20 to 7.50 mA
Supply voltage range	-0.70 to -0.60 V
Corrosion allowance	3.5 mm
Material tolerance	0.53 mm
Welding joint factor	1

3.6 Material selection

A few factors should be considered before selecting materials for design such as processed chemicals, cost, and a lifetime of the project, etc. The selection of specific material for reactor vessels, electrodes, and piping is done mainly for those three factors. Common key materials are used in various designs and their characteristics are given in Table 3.3.

Table 3.3: Comparison of properties between commonly used materials in design [64,65,66].

Materials	Iron alloy			Stainless steel	Carbon steel	Copper alloy	Nickel alloy	Aluminum
Properties	Gray	White	Ductile					
Corrosion Resistance	Very Low	Very Low	Very Low	High	Low	High	Very High	Medium
Machinability	Very High	High	High	Low	Medium	High	Low	High
Price	Very Low	Very Low	Very Low	High	Low	Very High	Very High	Medium
Tensile Strength	Medium	Very High	Medium	Very Low	Medium	Low	Medium	Low
Hardness	High	Very Low	Very Low	Medium	Very High	Very High	Low Medium	Very Low
Weldability	Very Low	Very High	Very Low	Medium	Very High	Very High	Low	Medium
Wear resistance	High	Very Low	Medium	Very Low	Medium	Low	Low	Low
Toughness	Very Low	Very Low	Very Low	Very High	High	Medium	High	Medium

Since the process is sensitive to corrosion for reactor vessel and piping and electric conductivity, an explicit surface zone for the electrodes, stainless steel is a preferable material for the design. SS has good strength, load capacity, service life, low maintenance, and fabrication. There are different grades in mainly four types of SS. Picking the right reinforced stainless steel implies measuring different factors such as the environment of the process, degree of corrosiveness, strength, fabrication, and cost, etc. Required process conditions and chemicals are vital information to know before material selection for the design. Four types of SS material with grades are given in Table 3.4.

Table 3.4: Contrast among differnt types of SS grades [67, 68,69,70,71,72].

SS grades (Types)	Corrosion resistance	Yield Strength	High-temperature limit	Cost Level	Applications	Magnetism
SS 304 (Austenitic)	Good	241 MPa	150 ˚C	Low	Food processing equipment, wastewater treatment, organic acid (except nitric acid), and kitchen appliances, etc.	Non-magnetic
SS 316 (Austenitic)	Better than SS 304	260 MPa	260 ˚C	Moderate	Food preparation, all organic acid, wastewater treatment, pharmaceuticals, marine, medical, and chemical containers, etc.	Non-magnetic
SS 409 (Ferritic)	Not good	262 MPa	675 °C	Low	Mufflers, low-quality kitchen utensils.	Magnetic
SS 410 (Martensitic)	Worse than SS 409	331 MPa	650 °C	Low	Bots, Nuts screws, bushings, etc.	Magnetic
SS 2205 (Duplex)	Best	450 MPa (minimum)	1000 °C	Very high	Marine, chemical, oil and gas industries, etc.	Magnetic

Considering all the factors of a selection of material, SS 316 is the most preferable material for the reactor vessel, the electrodes, and the piping design. For the spacer and electrode rod unplasticized polyvinyl chloride (uPVC) or rigid PVC is selected for its properties such as maximum temperature (60 °C) and pressure (3100 kPa) [73].

4 Design

The design of a 3D pilot reactor will further advance the experimental work done at USN [6,7,11] and give a more realistic commercial production, this is the most important section of the thesis. Since the dimensions of the full-size reactor will be based on scaling the experimental values performed in USN labs [7], the literature on AD-MES design, and preliminary design [74]. Determining costs will use values from the design phase. There are several reasons for the design, where the pilot design of the MES reactor should make important that assumptions are well stated and fundamented in the report. There are four main components considered in a design such as a vessel design, electrode design, piping design, and maintenance and safety design. Assumed parameters are taken from Table 3.1Table 3.2 for the design of the reactor. All the calculations are found in Appendix C and only the calculated results and formulas are shown in the design chapter. In the SolidWorks 2018 software, the measurements are in millimeter, gram, and second (MMGS).

4.1 Vessel design

The vessel is a combination of several types of reactor mentioned in Sub-chapter 3.1. The inlet pipe extended up to the centerline of the reactor vessel and downwards with a fin-like extended structure at the end of the pipe for creating good turbulence inside the reactor vessel instead of using a stirrer as CSTR. As very well-operating conditions are required for the reactants, this turbulence will build an environment as referenced in Table 3.2. Generally, a close vessel more than 150 mm diameter and 0.5 bar pressure difference ought to design as a pressure vessel, which is commonly known. Though the reactor should maintain 1 atm, the reactor is designed as a pressure vessel due to continuous biogas production. For designing a reactor vessel certain disciplines like thermodynamics, chemical kinetics, fluid mechanics, heat-mass transfer, safety, and economics are basic subjects to consider. There are several parts of the reactor is connected to the vessel such as pressure safety sensor with valve, inlet, and outlet wastewater pipe and outlet gas pipe.

4.1.1 Vessel dimensions

From Table 3.2, HRT is 3 hours, and the inlet and the outlet flow is 10 m^3/h. Therefore, the wastewater volume will be $V_w = (3 \times 10)\ m^3 = 30\ m^3$. Lab experimental ratio (R) is the ratio between the amount of wastewater tested in the USN lab and the total volume of reactor vessels [7]. The reactor vessel is designed on the scaling of this lab experimental ratio. The experimental volume of wastewater is 120 mL and the volume of the reactor vessel is 135 mL. Hence, the formula of the volume of the pilot reactor vessel is found below.

$$R = \frac{Volume\ of\ wastewater\ (V_w)}{Volume\ of\ reactor\ (V)} \tag{4.1}$$

$$V = \frac{V_w}{R} = \pi h r^2 \tag{4.2}$$

From equation (4.2), V is the total volume of the reactor vessel, which is 34 m^3. From the lecture of PT2012-1 20V Process Technology and Equipment at USN, an optimum height (h) and radius (r) can be found by applying an optimization theory for the reactor vessel. Thus, the minimum inside surface area (A) of the reactor vessel is given in equation (4.3).

$$\min_{r,h} A = 2\pi r^2 + 2\pi r h \tag{4.3}$$

There is one equality constraint. For this calculation, it is easy to separate one variable from the equality constraint and substitute it on the function that needs to optimize. From the equation (4.2), the height is defined as $h = \frac{34}{\pi r^2}$ and substituting it on the equation (4.3), which can be simplified to equation (4.4).

$$f(r)_{minimum} = 2\pi r^2 + \frac{34}{r} \tag{4.4}$$

Equation (4.4) is an unconstrained problem with a single variable (r) that can be easily calculated where the first partial derivative becomes zero.

$$\frac{\partial f(r)_{minimum}}{\partial r} = 4\pi r - \frac{34}{r^2} = 0 \tag{4.5}$$

From the equation (4.5), the optimum radius can be calculated as well as optimum height by substituting the value of optimum radius in the expression of height. Reducing the interior surface of a cylindrical vessel is a classic mathematical optimization problem by finding dimensions (radius and height) with a certain volume such that construction materials can be minimized.

Quantities such as volume, mass, density, surface area, etc. are calculated automatically when a specific material is selected for a designed component in SolidWorks 2018. The properties of the general material can be kept by default or manually in the software. The properties of SS 316 and rigid PVC are kept by default in SolidWorks 2018. After designing meshed electrodes, rigid cylindrical electrode rods, rectangular spacers, and inlet pipe, it is very easy to calculate the total volume occupied by these three components inside the reactor vessel with the help of SolidWorks 2018. The total occupied volume inside the vessel (V_o) could be calculated from the equation (4.5).

$$V_o = V_e + V_{i,p} + V_w \tag{4.6}$$

In equation (4.6), the total volume of electrodes with rods and spacer is $V_e = 0.924$ m^3 and volume of inlet pipe inside the vessel is $V_{i,p} = 0.0014$ m^3. From the value of V_o, it is possible to calculate the height of wastewater (h_w) and volume of headspace V_H for biogas.

$$V_H = V - V_o \tag{4.7}$$

Wastewater hydrostatic pressure, total pressure by metal components, total internal pressure, wall thickness, and corrected wall thickness are shown in equations (4.8), (4.9), (4.10), (4.11) and (4.12) respectively.

$$P_w = \rho g h_w \tag{4.8}$$

From equation (4.8), density is $\rho = 994$ kg/m^3 at 35 °C, the acceleration due to gravity is g =9.81 m/s^2 and wastewater height is $h_w = 5$ m.

$$P_m = \frac{mg}{A} = \frac{mg}{\pi r^2} \tag{4.9}$$

Where the total mass of all electrodes, rods, spacers, and the top lid is $m = 4475.5$ kg and radius is r ≈1.4 m.

$$P = P_w + P_m \tag{4.10}$$

$$t = \frac{P_i \times D_i}{(2Jf) - P_i} \tag{4.11}$$

$$t_c = t + CA + MT \tag{4.12}$$

Here in the equations (4.11) and (4.12), internal diameter is $D_i = 2r = (2 \times 1.4)\ m = 2.8\ m$, welding joint factor for double-welded butt or equivalent is $J = 1$, endurance limit or yield strength is $f = 269 \times 10^6\ Pa$, the corrected wall thickness t_c, the wall thickness t, corrosion allowance (CA), and material tolerance (MT). The material tolerance is 12.5% of $(t + CA)$. The corrected or design wall thickness is $t_c \approx 5$ mm.

Table 4.1: List of calculated value and designed value.

Quantity symbol	Calculated value	Designed value
V_w	30 m^3	30 m^3
R	$\frac{8}{9}$	$\frac{8}{9}$
V	34 m^3	39 m^3
r	1.4 m	1.5 m
h	5.5 m	5.5 m
V_o	31 m^3	31 m^3
h_w	5 m	4.5 m
V_H	3.07 m^3	7.8 m^3
P_w	49 kPa	49 kPa
P_m	91.5 kPa	91.5 kPa
P	140.5 kPa	140.5 kPa
t	0.3 mm	0.3 mm
t_c	5 mm	5 mm

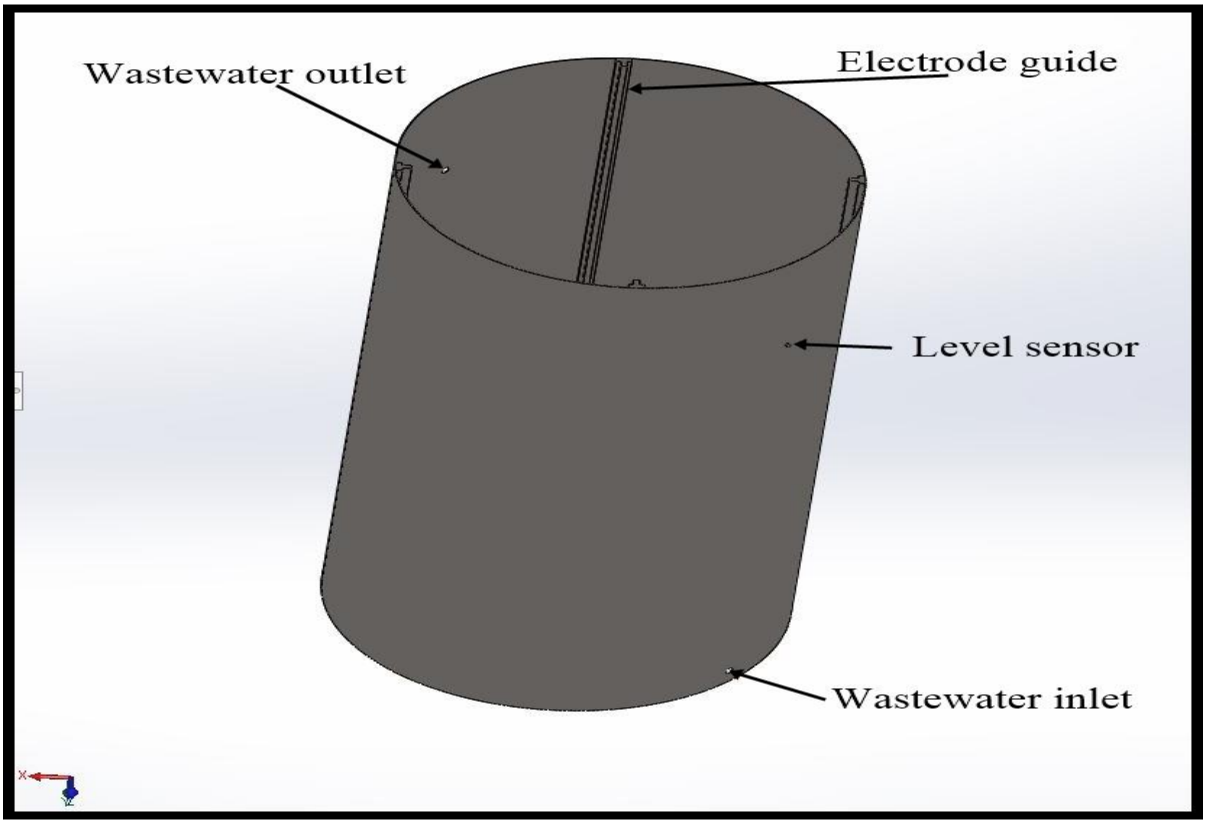

Figure 4.1: 3D view of the reactor vessel with components.

The dimensions of the vessel are shown in Figure 4.2. It is very difficult to show all the dimensions in one figure from the isometric view, which is the possible best view.

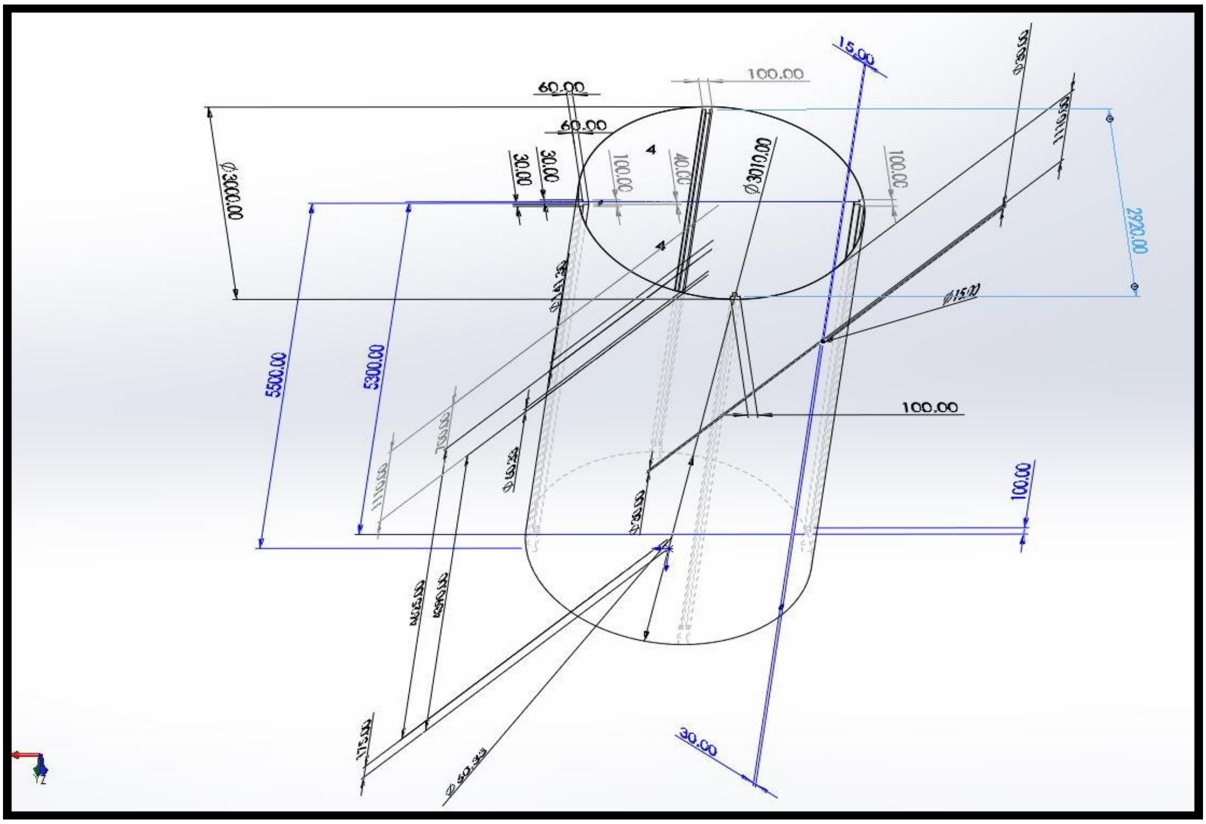

Figure 4.2: The dimensions of the reactor vessel in SolidWorks 2018.

4.1.2 Upper and bottom lid dimensions

The diameter of the upper lid is bigger than the bottom lid, which is 3100 mm. The upper lid has two lid hooks for the opening lid, thirty screw holes, a gas outlet hole, and a pressure sensor with a safety valve. SS 316 is the construction material and the thickness of the upper lid is 5 mm.

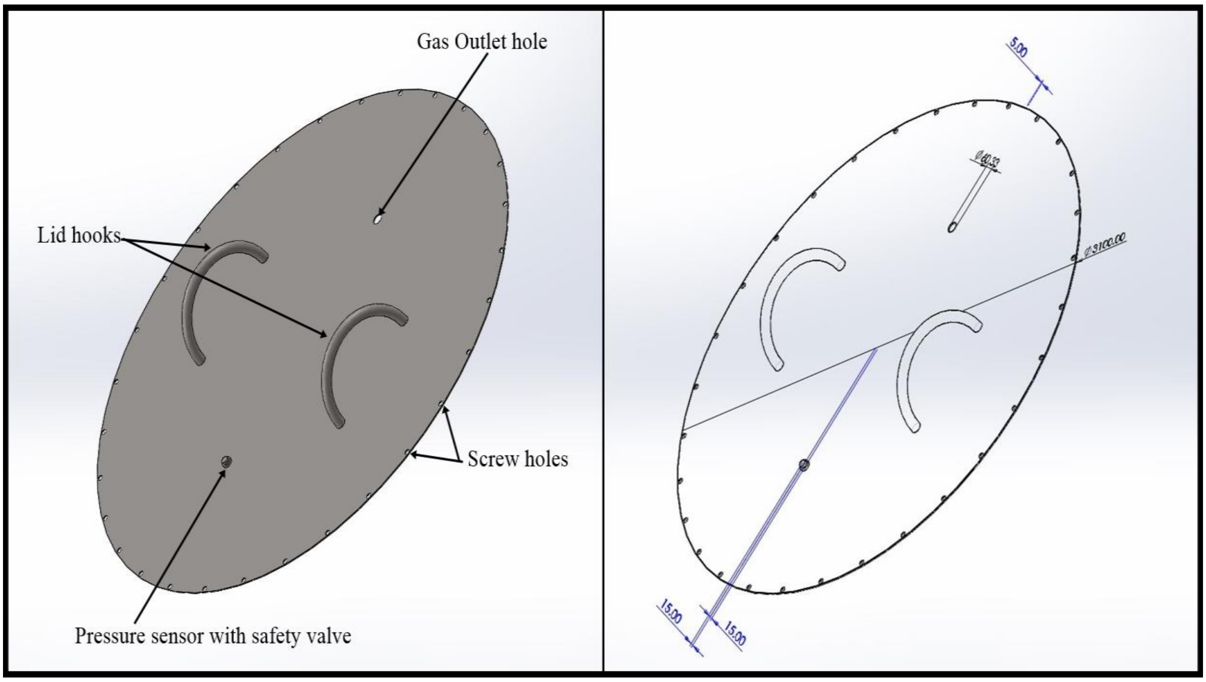

Figure 4.3: Dimensions and components of the upper lid.

The diameter of the bottom lid is 3000 mm and the thickness is the same as the upper lid. The bottom lid is attached by wielding join.

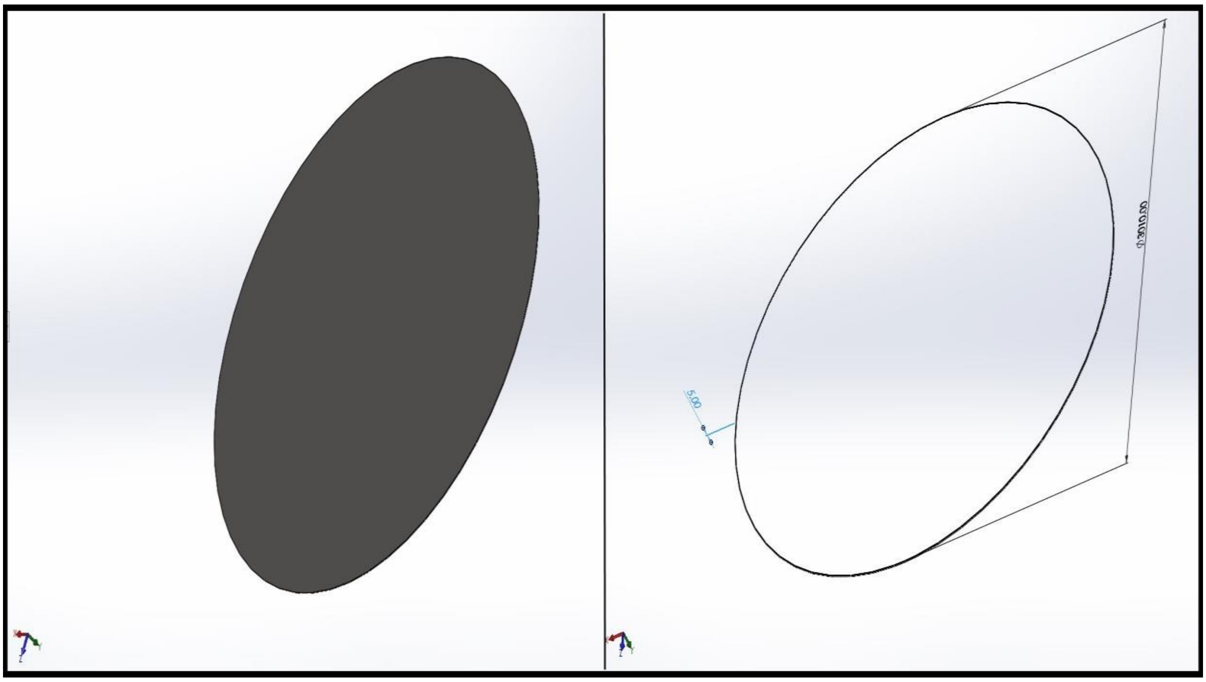

Figure 4.4: Dimensions of the bottom lid.

4.1.3 Vessel insulation and orientation

Cellulose coating with fabric is used for protective material as insulation of vessels. Cellulose is reasonable to spend in contrast with other insulating materials, cold weather like Norway, and the most widely used insulating material. In any case, it is better to keep 35 °C in the reactor for the adiabatic process and the desired rate of methane production. The selection of insulation material depends on the temperature difference between the inside and outside of the reactor vessel, the wall thickness, and the thermal conductivity. Thus, thermal conductivity has an important role in the MES process of insulation. The reactor vessel contains a continuous-flow fluid of more than 26.5 m^3. Therefore, the vessel should be vertically oriented on a concrete foundation [75]. From the figure, the reactor vessel should be placed after the centrifuge separator and before the existing AD vessel for wastewater supply. The biogas outlet of the MES reactor is connected to the mainstream biogas.

4.2 Electrode design

A certain voltage must be achieved to select the correct electrode, which is found in Table 3.2. Similarly, it is better to choose electrodes with higher columbic efficiency, otherwise called faradaic efficiency. It is also difficult to select the correct configuration and orientation for the electrodes [11]. The strength of electrodes needs to consider because of continuous fluid flows with uninterrupted MES reactions. SS electrode mesh is a more adaptable and affordable and woven mesh has performed better than expanded mesh as a catalyst. The active surface of the mesh is three times that of a flat sheet with the same dimensions [62].

4.2.1 Electrode dimensions

Methane production can be increased through the perfect material and configuration to supply more electrons and surface area at the reactor. The electrons are placed on top of each other such as anode, cathode, anode, and cathode, and so on. The electricity connection will be from the upper lid. The study states that it would be better if the electrical connection between the electrodes is in series. The position of the anode and cathode is such that the plates of the electrodes look like a mesh from the top view. The thickness of the plate is 1 mm with a 30 mm space between the plates. There is a plate around the electrode as the boundary frame and two holes for placing the electrode rods.

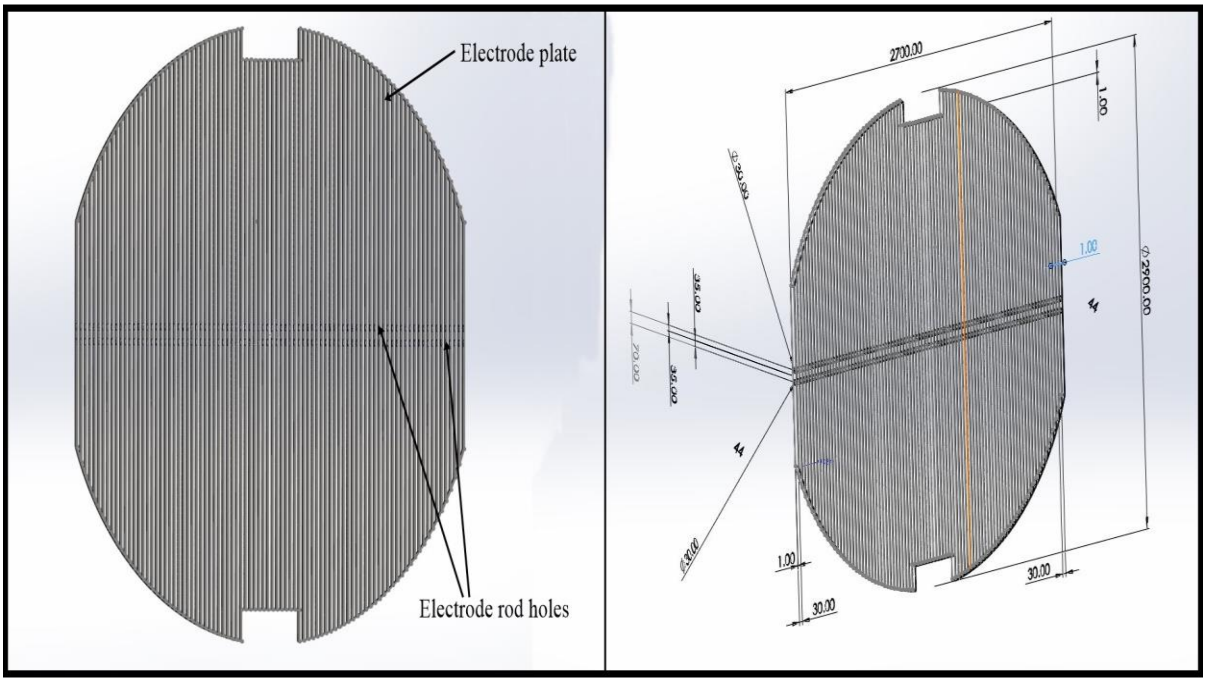

Figure 4.5: Dimensions of the electrode.

4.2.2 Electrode rod and spacer dimensions

One of the critical tasks to simplify the construction and installation of the electrode rod and spacer. Both play a vital role in the design of the reactor to hold the electrodes rigidly against the up flow of wastewater and prevent the short circuit among the electrodes and the sidewall of the reactor. The material used in these components is plastic due to its non-conducting properties. The electrode rod is placed through the electrode and spacer is after the end of the electrode boundary.

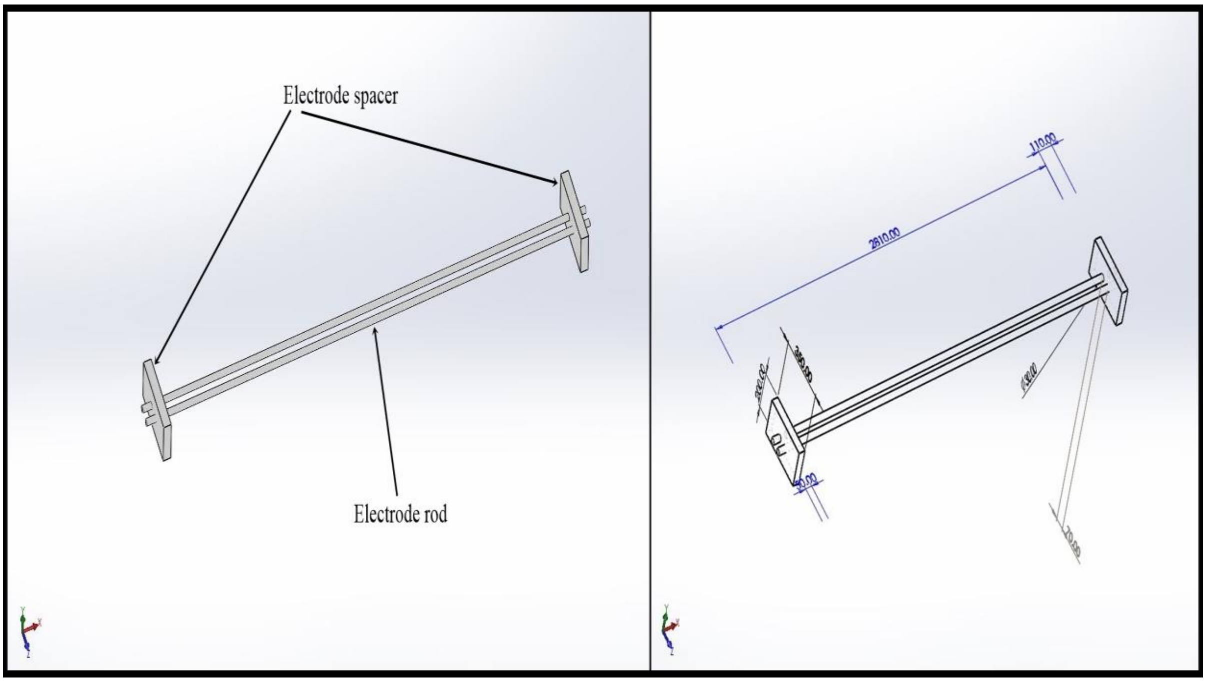

Figure 4.6: Dimensions of electrode rod and spacer.

4.2.3 Electrode guide dimensions

The functionality of the electrode guide is almost the same as that of the electrode rod and spacer. Electrode guides also give extra strength to the reactor like columns in building construction. The design has four electrode guides and two of them will use for anodes and the others for holding cathodes.

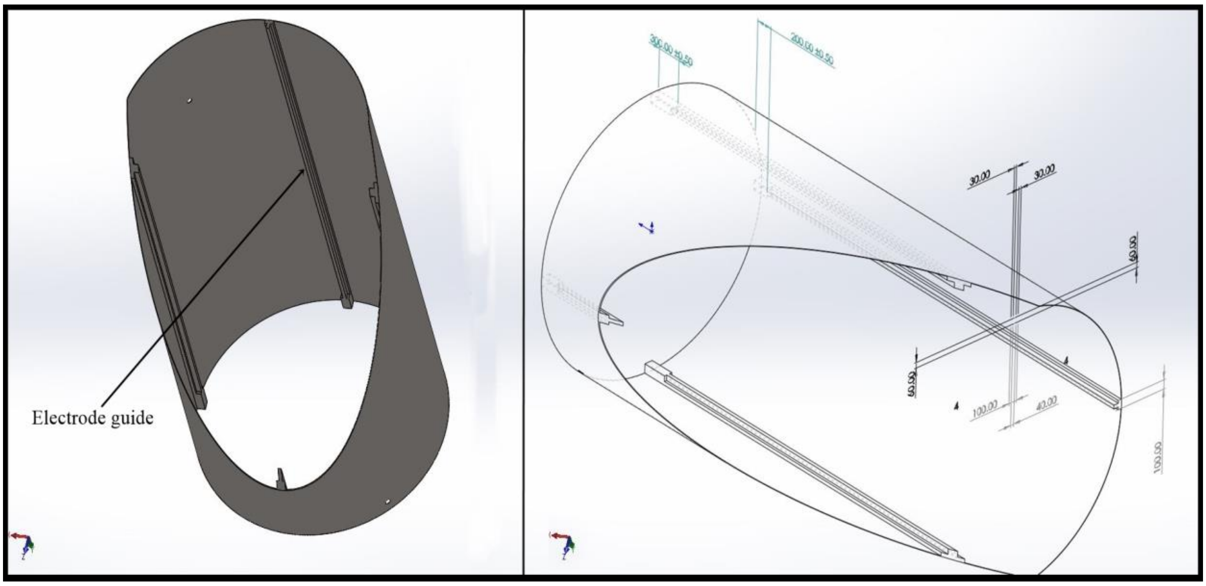

Figure 4.7: Dimensions of electrode guide dimensions.

4.3 Piping and sensor design

The inlet pipe plays an important role in creating a turbulent flow of wastewater inside the reactor. The inlet pipe is placed up to the centerline of the reactor. There is a fin at the end of the inlet pipe, which basically helps to create turbulence. There are three sensors, a valve and a pump connected to the inlet pipe. The pipe is SS 316 2-inch pipe.

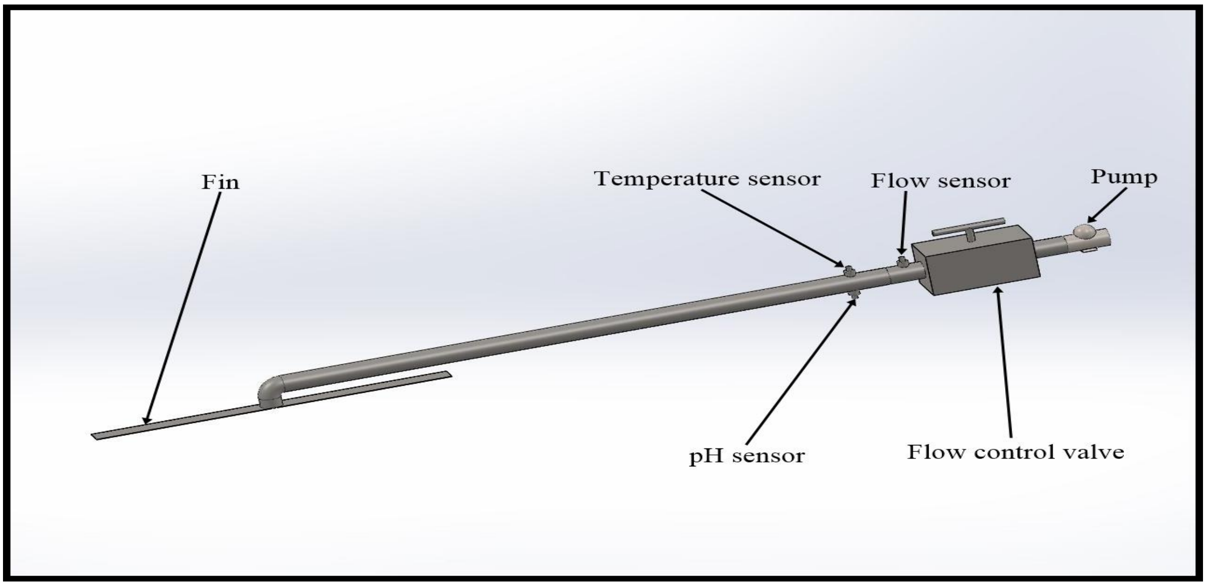

Figure 4.8: Inlet pipe with components.

The outlet pipe has three sensors to measure pH, temperature, and flow rate of wastewater. It is a simple SS 316 2 inch pipe. There is a level sensor just opposite to the outlet pipe.

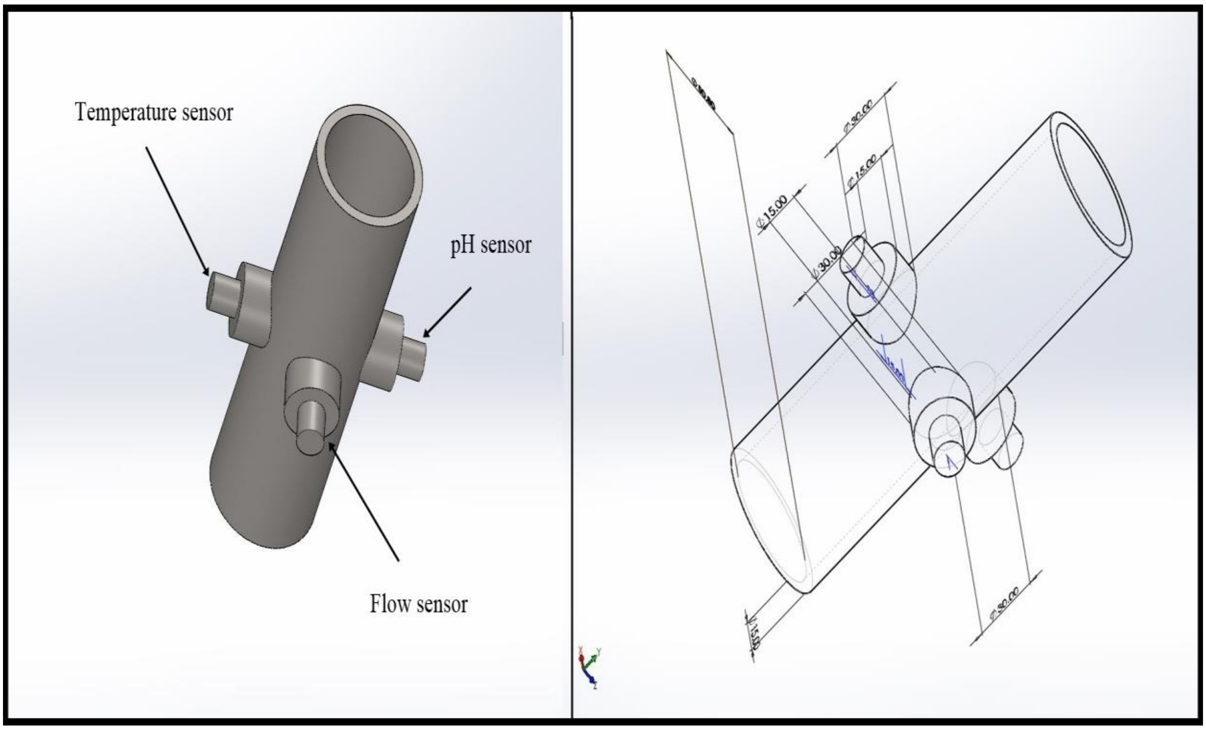

Figure 4.9: Outlet pipe with dimensions and components.

The gas outlet pipe is also a simple design with a quality sensor. This pipe is also a 2-inch SS 316 pipe. It is placed at the upper lid.

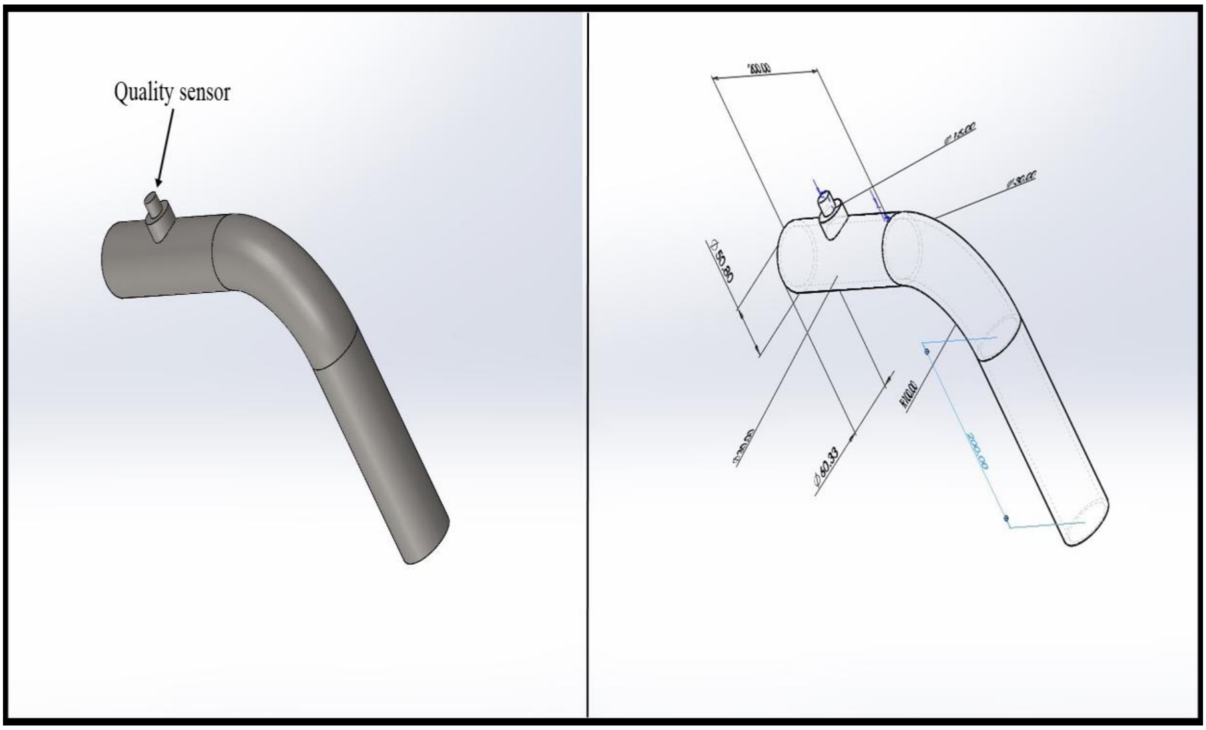

Figure 4.10: Gas outlet pipe with dimensions and components.

4.4 Maintenance and safety design

Up running the process is a basic activity of maintenance. The best method of preventive maintenance (PM) to prevent a breakdown in the production line is to go a few months of monitoring the reactor because it is designed as a pilot and new technology. There should be no maintenance manual. Therefore, observation is the best solution to create a PM schedule. All major parts are easily accessible through the top. The upper lid has a pair of hooks to open with the help of a weightlifter machine. All the designs of the main components and their fittings are very simple in terms of maintenance.

From the table Table 3.2, the current range in the MES reactor is 0.2 mA to 7.5 mA. This current range does not cause any harm to the human body. The current supply range should be higher in the pilot reactor than the experimental reactor. Thus, the pilot reactor should be insulated with non-conductive material as discussed in Chapter 4.1.3. Grounding any electrical equipment is the best solution one can ever give. The temperature and the pressure are very small, but the pilot reactor has both the sensors to monitor.

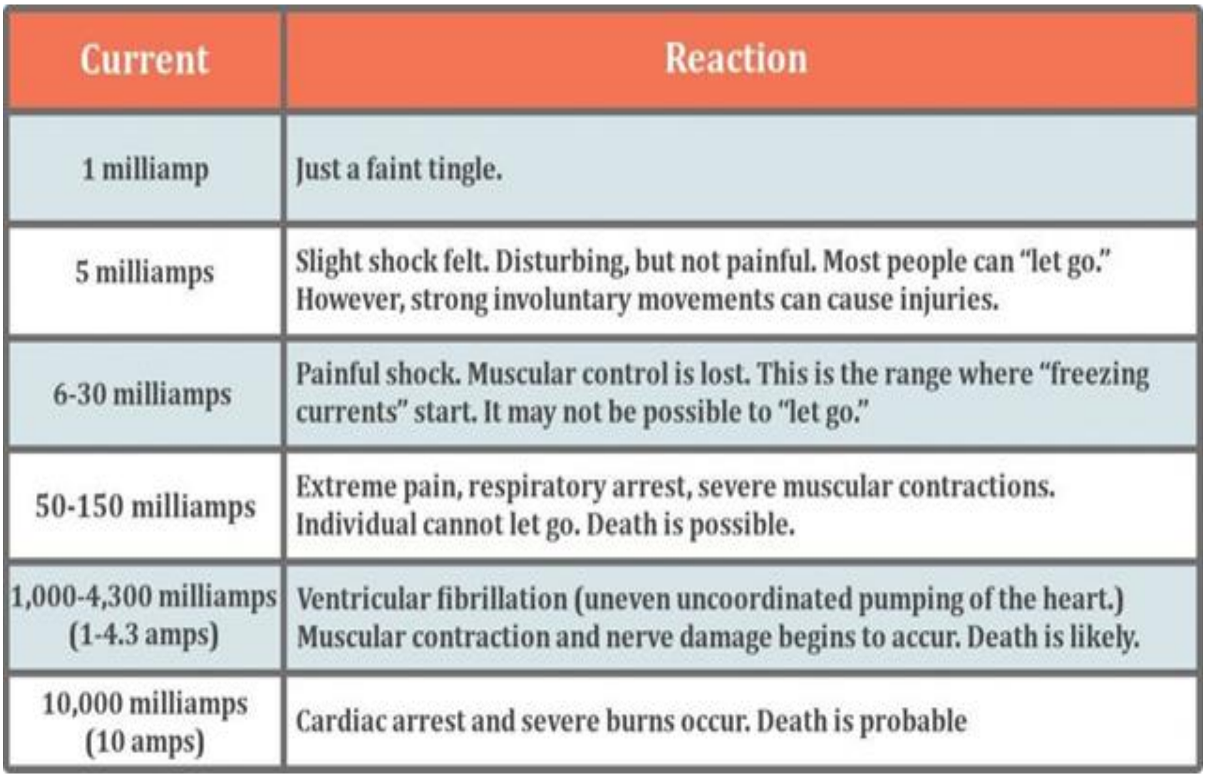

Current	Reaction
1 milliamp	Just a faint tingle.
5 milliamps	Slight shock felt. Disturbing, but not painful. Most people can "let go." However, strong involuntary movements can cause injuries.
6-30 milliamps	Painful shock. Muscular control is lost. This is the range where "freezing currents" start. It may not be possible to "let go."
50-150 milliamps	Extreme pain, respiratory arrest, severe muscular contractions. Individual cannot let go. Death is possible.
1,000-4,300 milliamps (1-4.3 amps)	Ventricular fibrillation (uneven uncoordinated pumping of the heart.) Muscular contraction and nerve damage begins to accur. Death is likely.
10,000 milliamps (10 amps)	Cardiac arrest and severe burns occur. Death is probable

Figure 4.11: How various estimations of current impacts the human body [76].

Methane is the second-largest amount of biogas components and rich in energy. It should not be emitted in the environment. Methane is highly combustible when mixed with air but easily diluted with air. Therefore, the reactor should not be placed near any high-temperature equipment, even if it is less likely to explode [77].

5 Cost estimation

Cost estimation is important to determine whether the project should be executed (economic feasibility) and to enable accurate choices between competing alternatives such as quality of equipment, selection between a capital expense (CAPEX) and operating expense (OPEX). Before investing, it is important to consider a detailed financial analysis. Economics helps an investor how much capital should be invested and how long it will take to achieve a breakeven from a project.

5.1 Reactor installation cost

There are several cost estimation techniques available. As the MES reactor is a pilot project, it is better to use a detail factor method from the installation factor sheet 2016 in Appendix D available in USN for Norway [78]. This method is based on material types, sizes, and types of equipment and different disciplines separately. The factor of different disciplines is the fraction of carbon steel (CS) equipment cost, reference cost level is Rotterdam, and site condition is normal in the installation factor sheet. The prices of the equipment are taken from the online equipment purchase website Alibaba and the price varies on specifications of equipment, international management certification (ISO, OHSAS, etc.), product certification (CE, API, ASTM, ASME, etc.), supplier country and services. The following information of the equipment is given in Table 5.1 and the designed reactor consists of the following equipment in Table 5.2.

Table 5.1: Price for different types of equipment of MES reactor [79, 80, 81].

Equipment	Material	Size	Year	Currency	Cost	Country
UASB reactor	SS 316	40 m^3	2020	USD ($)	28000	China
Centrifugal pump	SS 316	500 W	2020	USD ($)	500	China
Electrode	SS 316	1000 kg	2020	USD ($)	3800	China

Table 5.2: Required equipment specification of the designed reactor.

Equipment	Material	Size
UASB reactor	SS 316	39 m^3
Centrifugal pump	SS 316	273 W
Electrode	SS 316	3524 kg

The cost of new equipment can be determined from the cost of a similar project of a known capacity through the capacity factor method. A general quick and adequate accurate technique is often used to assist in decision making at the pre-design stage of the project. When the difference in project sizes is small and reasonable capacity factor exponent is used, the estimation error is small. Normally, the average capacity factor exponent is 0.65 for process industries [78].

$$\frac{Cost\ of\ new\ project}{Cost\ of\ similar\ project} = \left(\frac{Capacity\ of\ new\ project}{Capacity\ of\ similar\ project}\right)^{e} \tag{5.1}$$

The average currency exchange rate from USD to NOK is 1 USD equal to 10.45 NOK in April 2020 [82]. The location factor of Norway is 1.1 and China is 0.65. As the installation factor sheet is made in 2016, the cost of equipment needs to convert from 2020 to 2016. The price index of Norway in 2016 is 103.6 NOK and in April 2020 is 111.7 NOK [83]. The calculated result and different values found during the calculation are given in the Table. The calculations are done in Appendix E.

Table 5.3: Total calculated result of TIF_{2016} and TIC_{2020}.

Subject	Reactor	Pump	Electrode	Total
Material	SS 316	SS 316	SS 316	
Equipment joint	Welded	Machined	Welded	
Material factor	1.75	1.3	1.75	4.8
Process chemical	Fluid	Fluid	Fluid	
Total installation factor $(TIF)_{2016}$	10.72	30.37	13.19	54.28
$Cost_{2020}$	481.68 kNOK	5.96 kNOK	152.30 kNOK	639.94 kNOK
Total installation cost $(TIC)_{2020}$	2950.65 kNOK	139.33 kNOK	1147.88 kNOK	4237.86 kNOK

The total cost of the MES reactor is 4.24 million NOK and expected accuracy between ±30% with a confidence level of 50%. The class of cost estimation of this project is 3 because the design has detailed sizing and budget. From the Figure, the expected range of the project is between 2.97 million NOK and 5.51 million NOK.

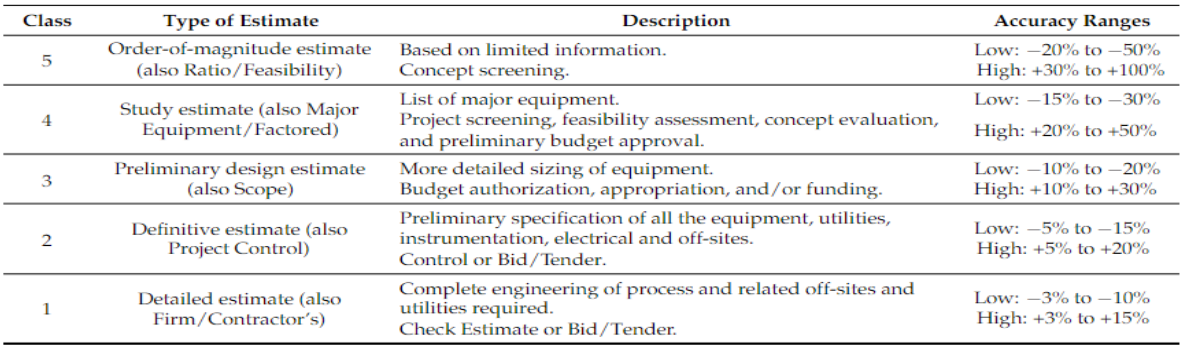

Class	Type of Estimate	Description	Accuracy Ranges
5	Order-of-magnitude estimate (also Ratio/Feasibility)	Based on limited information. Concept screening.	Low: −20% to −50% High: +30% to +100%
4	Study estimate (also Major Equipment/Factored)	List of major equipment. Project screening, feasibility assessment, concept evaluation, and preliminary budget approval.	Low: −15% to −30% High: +20% to +50%
3	Preliminary design estimate (also Scope)	More detailed sizing of equipment. Budget authorization, appropriation, and/or funding.	Low: −10% to −20% High: +10% to +30%
2	Definitive estimate (also Project Control)	Preliminary specification of all the equipment, utilities, instrumentation, electrical and off-sites. Control or Bid/Tender.	Low: −5% to −15% High: +5% to +20%
1	Detailed estimate (also Firm/Contractor's)	Complete engineering of process and related off-sites and utilities required. Check Estimate or Bid/Tender.	Low: −3% to −10% High: +3% to +15%

Figure 5.1: Capital cost estimation (CCE) classifications [84].

5.2 Reactor breakeven point

The breakeven point is also an important factor to make a decision for the execution of a project. To find the breakeven point, the production of methane needs to calculate first. The calculations are found in Appendix E and the results are given in **Error! Reference source not found.**. These calculations also follow the factor method as like as Sub-chapter 5.1. and cost of methane conversion is present in equation (5.2)

$$C_{methane}\left[\frac{NOK}{m^3}\right] = C_{methane}\left[\frac{USD}{kg}\right] \times \rho_{methane}\left[\frac{kg}{m^3}\right] \times \frac{NOK}{USD} \tag{5.2}$$

$$Produced\ methane\ \left[\frac{m^3}{day}\right] = \frac{Volume\ of\ wastewater\ [L]}{Yield\ \left[\frac{\left(\frac{L}{m^3}\right)}{day}\right]} \tag{5.3}$$

$$Break\ even\ [days] = \frac{Total\ cost\ of\ reactor\ [NOK]}{Produced\ methane\left[\frac{m^3}{day}\right] \times Cost\ of\ methane\ \left[\frac{NOK}{m^3}\right]} \tag{5.4}$$

$$Operating\ days = plant\ uptime \times\ days\ in\ a\ year \tag{5.5}$$

$$Break\ even\ [years] = \frac{Breakeven\ [days]}{Operating\ days\ \left[\frac{days}{years}\right]} \tag{5.6}$$

Table 5.4: Values of all the calculations for breakeven point [82, 83, 85, 86].

Subjects	Values	Unit
Price of methane$_{2017}$	12.4	[USD/m^3]
Price of methane$_{2020}$	13.13	[NOK/m^3]
Exchange rate$_{2017}$	8.26	[NOK/USD]
Price index$_{2017}$	105.5	[NOK]
Density of methane (gas)	0.63	[kg/m^3] at 35 °C and 1 atm

Production of methane$_{24HRT}$	495	[(L/m$^3_{reactor}$)/day]
Production of methane$_{3HRT}$	3960	[(L/m$^3_{reactor}$)/day]
Total methane production in MES reactor	119	[m^3/day]
Perfect process plant uptime	350	[day] 96% of a year
Breakeven point	8	[year]

The breakeven point for the project is about 8 years, which is preferable and economically feasible for any project.

6 Efficiency of reactor

The efficiency of the theoretical designed MES reactor is compared with the experimental values found in the lab in terms of methane production rate (MPR) per day. Cathode potential is an important factor to decrease the input cost in the MES process. Electricity supply can increase by approximately 13.6% in MPR. The concentration of COD can be varied from 1000 to 8000 mg/L due to the type of feed and efficiency of the biogas tank [87]. The concentration of methane could be found above 90% continuously. In biogas production, a 50-60% reduction of CO_2 emissions is possible in the MES reactor. The theoretically calculated values of the designed reactor and the experimental values are given below in Table 6.1 [7].

Table 6.1: Comparison between experimental and theoretical values of the MES reactor [7].

Quantity	Experimental value	Theoretical value
Wastewater volume	0.00012 m^3	30 m^3
HRT	24 h	3 h
Cathode surface area	0.001 m^2	450 m^2
Anode surface area	0.003 m^2	450 m^2
MPR per day	0.00006 m^3/day	119 m^3/day
Cost of electrode	High	Low

Assume the production rate is the same in both cases, then the increment efficiency of the designed reactor in the case of HRT can be calculated from the equation (6.1).

$$Increased\ efficiency\ = \left(1 - \frac{Value_{theoretical} - Value_{experimental}}{Value_{theoretical}}\right) \times 100\% \qquad (6.1)$$

The efficiency will increase by 12.5% in the designed reactor then-experimental lab reactor. In the theoretical value, the surface area of the electrode is higher than the experimental electrode. This might yield more methane production reducing more CO_2 because more electron supply to the reactants can produce more methane in biogas [7,11]. Another important factor is the cost of the electrode material, which is one of the reasons to select SS 316 as an electrode. Thus, the theoretical reactor has more economical efficiency than experimental. Likewise, it is possible to show that, the efficiency of the designed reactor is more than that of the experimental reactor in every factor shown in Table 6.1. by using a general efficiency formula. The optimization of the designed reactor is 7 times comparing with the experimental reactor. The designed reactor is able to complete reactions in 3 h, which is also called HRT in continuous flow.

7 Result

It is found that design main parameters, dimensions of vessel and electrodes, the orientation of reactor, electrode material, installation cost, and efficiency are the main task of this thesis. The calculated results are given below in Table 7.1.

Table 7.1: Final results of the designed reactor with remarks.

Quantities	Result	Remarks
HRT	3 h	Expected
Flow rate (inlet and outlet)	10 m^3/h	Expected
Temperature	35° C	Expected
pH range	6.8 to 8.5	Expected
Inside pressure	101325 Pa	Expected
Reactor orientation	Vertical with the concrete foundation	Selected
Material of reactor	SS 316	Selected
MPR	119 m^3/day	Calculated
CAPEX	4.24 million NOK	Calculated
Efficiency of reactor	12.5%	Calculated
Total volume of the vessel	39 m^3	Calculated in SolidWorks 2018
Surface area of each electrode	22 m^2	Calculated in SolidWorks 2018

The overall designed reactor is shown below in Figure 7.1, which is drowned in 3D by using SolidWorks 2018.

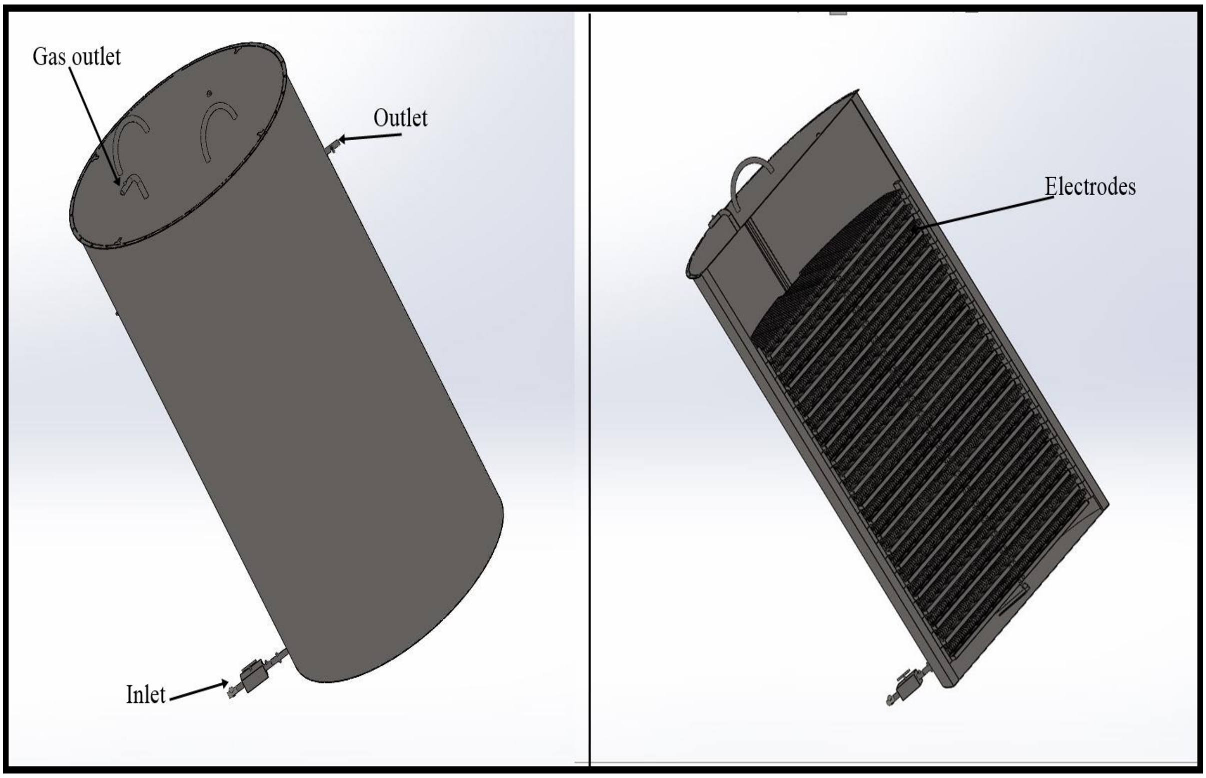

Figure 7.1: Final designed reactor with a section cut view.

8 Discussion

The reactor is based on the theories, literature, and hypotheses related to the reactor design and MES process. There are some factors that are not considered such as OPEX, growth of biofilm, SS 316 as biocathode and MPR related to 3h HRT, etc., which could give a more realistic and more economically feasible MES reactor. These factors could be studied and researched in the future, which is discussed in this chapter.

8.1 Designed vessel

Turbulence is very important for perfectly mixed conditions and good contact between wastewater and electrodes. Maybe transition flow could be a better solution. A CFD analysis should be run, which was not focus during the thesis. The designed reactor has no predecessors. Thus, higher cost and more process optimization and opportunity for industrial production are possible through more knowledge obtaining in this field. A more appropriate insulation system should be installed for the adiabatic process through heat loss calculation and simulation. The bottom lid of the reactor could have an exhaust pipe at the center. This could help to drain out the wastewater during cleaning and maintenance.

8.2 Designed electrode

The optimization of electrode design is challenging as the field is fairly new. Thus, scaling the electrode is not possible from the experimental setup to a full-size pilot design. The supply of electricity is the main task in the MES Reactor. MES process needs very low DC voltage with the high current flow as the reactor is very big. This needs a transformer station to transform high AC voltage to low DC voltage. This voltage drop will cause a huge energy loss, which can be avoided by a series connection among the electrodes a little, but which need further studies. Optimization of current supply needs the implementation of the pilot design, simulation, and research. In the preliminary design project, the electrodes are designed as a propeller of a ship, but more surface contact area needs to grow more biofilm. therefore, anodes and cathodes are oriented horizontally, and the plates are placed crisscross, which looks like a mesh of electrodes. The probability of blocking the mesh gap is high due to the accumulation of small particles. This problem could be solved through the high flow rate of wastewater by adding a recirculation pump because the high flow rate has a greater surface share force, which is not included in the design factors. The key performance indicators depend on microbial catalysts, methane production rate, and electrode materials. The perfect electrode material should have high conductivity, excellent chemical stability, high mechanical strength, biocompatibility, high surface area, and low cost [88]. MES reactors have high efficiency of carbon content electrodes but they are expensive. Therefore, SS 316 is used as both anode and cathode, which is cheaper. Very little literature on SS 316 and SS 316 mixed alloys are available as the electrode. Therefore, SS 316 as electrode material may be a very important topic for future studies. MES will reduce the rate of greenhouse gas pollution and CO_2 emissions. This gives a decent inspiration to keep doing research in this field.

8.3 Designed economics

Generally, CAPEX and OPEX are calculated to find out the breakeven time but the present work emphasizes only CAPEX. There are mainly two facts that need to observe to find out the OPEX such as maintenance and running cost (additional chemicals, electricity supply, salaries, etc.). These are also called operational expenditures. Only maintenance contributes around 35–40% to the operational expenditure and it increases as plant ages generally [89]. Likewise, the running cost needs farther more studies. There may be a reserve tank before the MES reactor shown in Figure 1.3 and the cost of the reserve tank is not calculated. It is a matter for debate as to whether it is best to have a reserve tank in the process flow. The advantages of the atmospheric tank are cheap and help in the continuous process flow.

8.4 Designed efficiency

The percentage of methane gas should be more in the MES reactor than the AD plant. Thus, the up-gradation of biogas is less extensive and energy demanding. Less cleaning of the biogas is needed to increase the purity, i.e. downstream scrubbers. Degraded biomass at the effluent can be used as fertilizer. Clean fertilizer helps with the working environment for the farmer and the environment. The efficiency of the designed reactor is calculated in terms of HRT with the experimental reactor, but other factors can be shown after experimental analysis.

8.5 Methane production rate

The methane production rate is should be as feasible to execute the project economically, which is 118.81 m3/day as calculated in Chapter 5.2. It may be argued that the value may be higher or lower due to the electrode configuration and a few study literature. It can also change the breakeven time of almost 8 years. Higher production of methane could encourage the application of MES reactors to existing AD plants and reduce the need for fossil fuels.

8.6 Stability

As mentioned, degraded biomass in the sludge can give better working conditions, especially in terms of odor advantage to the people lives nearby the farms and fields. There will be methane emissions in the environment as greenhouse gases. MES reactor is a stable process but more stability can be achieved by reducing the emission of CO_2 into methane through further researches.

8.7 Future perspectives

One of the constraining elements for the improvement of electrode materials is an absence of knowledge of electron exchange from the cathode to the micro-organisms. It is difficult to control pH and nutrient gradients inside the biofilm matrix with engineering biofilm. The cost of electrode material is one of the major barriers to integrating the MES reactor. Optimization of the current density of biocathode needs to develop by cheap and effective electrodes. DIET needs more researches for developing anodic conversions rather than water oxidation in the anode. A more economical MES process is possible by developing carbon chin products other than acetate [89].

9 Conclusion

For this relevant study, it is necessary to create different simulations for more accurate design based on temperature profiles and flow patterns. More researches are necessary on electrode material and electrode electricity connection, especially for optimal voltage and current supply in the reactor. The main design parameters are 3 h HRT, flow 10 m^3/s, DC voltage -0.65 V, pH about 7. The dimensions of the reactor are volume 39 m^3, height 5.5 m, radius 1.5 m, and the thickness of the reactor wall is 5 mm with vertical orientation. The design surface area of each electrode is 22 m^2 and the total number of electrodes is 42. The anodes and the cathodes are orientated horizontally one on top of the other. SS 316 is used as the construction material for reactor vessel, electrodes, piping, and pump for its practical use in wastewater treatment and cost-effectiveness. The MES reactor cost is about 4.24 million NOK with the breakeven time of 8 years, which is very much feasible for this type of project. The cost may increase or decrease depending on the shape, size and placement of the reactor such as the use of inlet or outlet delivery pump and the number of pumps depend on the placement of the reactor. The production rate of methane is 119 m^3/day. The increased efficiency of the pilot designed reactor is 12.5% than that of the experimental reactor in the lab. The process optimization of the designed reactor is 7 times than the experimental reactor due to less HRT time. The integration of MES in existing WWTP is exclusive and less energy demanding for upgrading methane with higher stability by bi-products. Electrochemical methane production has a significant possibility as an alternative fuel solution. The electrochemical process produces most of the methane in the MES reactor. Moreover, investment and research are needed on electron transfer and why it depends on cathode potential and what material is more preferable as the electrode.

References

[1] International Energy Agency, “World energy outlook: Chapter 1 — introduction and scope,” 2017.

[2] Bullis, K., “Audi to make fuel using solar power,” MIT Technology Review, pp. 1–7, 2013.

[3] EU Roadmap, EREC, "Mapping renewable energy pathways towards 2020", 2011 [Online]. Available: http://www.eufores.org/fileadmin/eufores/Projects/REPAP_2020/EREC-roadmap-V4.pdf [Accessed: 02 May 2020].

[4] REN21, Renewables 2017: Global Status Report, vol. 72, October 2017.

[5] Lu, Q. and Jiao, F., “Electrochemical CO2 reduction: Electrocatalyst, reaction mechanism, and process engineering”, Nano Energy, vol. 29, pp. 439–456, 2016.

[6] Nelabhotla, A. and Dinamarca, C., "Optimisation of Electrochemical Treatment of Artificial Wastewater Using Cyclic Voltammetry", International Journal of Environmental Science and Development, vol. 9, no. 8, pp. 218-221, 2018.

[7] Nelabhotla, A. and Dinamarca, C., "Bioelectrochemical CO2 Reduction to Methane: MES Integration in Biogas Production Processes", Applied Sciences, vol. 9, no. 6, p. 1056, 2019.

[8] Union Gas, "Chemical Composition of Natural Gas - Union Gas", 2020 [Online]. Available: https://www.uniongas.com/about-us/about-natural-gas/chemical-composition-of-natural-gas [Accessed: 02 May 2020].

[9] Statistisk sentralbyrå Statistics Norway (SSB), “11561: Energy Balance. Supply And Consumption, By Energy Product 1990 - 2018-PX-Web SSB”, 2020 [online]. Available: https://www.ssb.no/en/statbank/table/11561/ [Accessed: 3 May 2020].

[10] Statistisk sentralbyrå Statistics Norway (SSB), “Production and consumption of energy, energy balance”, 2017 [online]. Available: https://www.ssb.no/en/energi-og-industri/statistikker/elektrisitet/aar [Accessed: 3 May 2020].

[11] Nelabhotla, A. and Dinamarca, C., “Electrochemically mediated CO2 reduction for bio-methane production: a review”. Reviews in Environmental Science and Bio/Technology, 17(3), pp.531-551, 2018.

[12] Mueller, J., "Microbial catalysis of methane from carbon dioxide", Dissertation, The Ohio State University, 2012.

[13] Rabaey, K. and Rozendal, R., “Microbial electrosynthesis — revisiting the electrical route for microbial production”, Nature Reviews Microbiology, 8(10), pp.706-716, 2010.

[14] Rozendal, R., Jeremiasse, A., Hamelers, H. and Buisman, C., Hydrogen “Production with a Microbial Biocathode”, Environmental Science & Technology, 42(2), pp.629-634, 2008.

[15] Torres, C., Kato Marcus, A. and Rittmann, B., “Proton transport inside the biofilm limits electrical current generation by anode-respiring bacteria”, Biotechnology and Bioengineering, 100(5), pp.872-881, 2008.

[16] Demirel, B. and Scherer, P., “The roles of acetotrophic and hydrogenotrophic methanogens during anaerobic conversion of biomass to methane: a review”, Reviews in Environmental Science and Bio/Technology, 7(2), pp.173-190, 2008.

[17] Villano, M., Monaco, G., Aulenta, F. and Majone, M., “Electrochemically assisted methane production in a biofilm reactor”, Journal of Power Sources, 196(22), pp.9467-9472, 2011.

[18] Villano, M., Aulenta, F., Ciucci, C., Ferri, T., Giuliano, A. and Majone, M., “Bioelectrochemical reduction of CO2 to CH4 via direct and indirect extracellular electron transfer by a hydrogenophilic methanogenic culture”, Bioresource Technology, 101(9), pp.3085-3090, 2010.

[19] Habermann, W. and Pommer, E., “Biological fuel cells with sulphide storage capacity”, Applied Microbiology and Biotechnology, 35(1), 1991.

[20] Liu, H., Ramnarayanan, R. and Logan, B., “Production of Electricity during Wastewater Treatment Using a Single Chamber Microbial Fuel Cell”, Environmental Science & Technology, 38(7), pp.2281-2285, 2004.

[21] Butler, C., Clauwaert, P., Green, S., Verstraete, W. and Nerenberg, R., “Bioelectrochemical Perchlorate Reduction in a Microbial Fuel Cell”, Environmental Science & Technology, 44(12), pp.4685-4691, 2010.

[22] Cheng, S., Xing, D., Call, D. and Logan, B., “Direct Biological Conversion of Electrical Current into Methane by Electromethanogenesis”, Environmental Science & Technology, 43(10), pp.3953-3958, 2009.

[23] Rabaey, K., Boon, N., Höfte, M. and Verstraete, W., “Microbial Phenazine Production Enhances Electron Transfer in Biofuel Cells”, Environmental Science & Technology, 39(9), pp.3401-3408, 2005.

[24] Straub, K. and Schink, B., “Ferrihydrite-Dependent Growth of Sulfurospirillum deleyianum through Electron Transfer via Sulfur Cycling”, Applied and Environmental Microbiology, 70(10), pp.5744-5749, 2004.

[25] Sakakibara, Y. and Kuroda, M., “Electric prompting and control of denitrification”, Biotechnology and Bioengineering, 42(4), pp.535-537, 1993.

[26] Clauwaert, P., Tolêdo, R., van der Ha, D., Crab, R., Verstraete, W., Hu, H., Udert, K. and Rabaey, K., “Combining biocatalyzed electrolysis with anaerobic digestion”, Water Science and Technology, 57(4), pp.575-579, 2008.

[27] Rabaey, K. and Rozendal, R., “Microbial electrosynthesis — revisiting the electrical route for microbial production”, Nature Reviews Microbiology, 8(10), pp.706-716, 2010.

[28] Park, D. and Zeikus, J., “Electricity Generation in Microbial Fuel Cells Using Neutral Red as an Electronophore”, Applied and Environmental Microbiology, 66(4), pp.1292-1297, 2000.

[29] Peguin, S., Goma, G., Delorme, P. and Soucaille, P., “Metabolic flexibility of Clostridium acetobutylicum in response to methyl viologen addition”, Applied Microbiology and Biotechnology, 42(4), pp.611-616, 1994.

[30] Siegert, M., Yates, M., Call, D., Zhu, X., Spormann, A. and Logan, B., “Comparison of Nonprecious Metal Cathode Materials for Methane Production by Electromethanogenesis”, ACS Sustainable Chemistry & Engineering, 2(4), pp.910-917, 2014.

[31] Xu, H., Wang, K. and Holmes, D., “ Bioelectrochemical removal of carbon dioxide (CO 2): An innovative method for biogas upgrading”, Bioresource Technology, 173, pp.392-398, 2014.

[32] Boone, D., Johnson, R. and Liu, Y., “Diffusion of the Interspecies Electron Carriers H2 and Formate in Methanogenic Ecosystems and Its Implications in the Measurement of Km for H2 or Formate Uptake”, Applied and Environmental Microbiology, 55(7), pp.1735-1741, 1989.

[33] Stams, A. and Plugge, C., “Electron transfer in syntrophic communities of anaerobic bacteria and archaea”, Nature Reviews Microbiology, 7(8), pp.568-577, 2009.

[34] Morita, M., Malvankar, N., Franks, A., Summers, Z., Giloteaux, L., Rotaru, A., Rotaru, C. and Lovley, D., “Potential for Direct Interspecies Electron Transfer in Methanogenic Wastewater Digester Aggregates”, mBio, 2(4), 2011.

[35] Reguera, G., McCarthy, K., Mehta, T., Nicoll, J., Tuominen, M. and Lovley, D., “Extracellular electron transfer via microbial nanowires”, Nature, 435(7045), pp.1098-1101, 2005.

[36] Gorby, Y., Yanina, S., McLean, J., Rosso, K., Moyles, D., Dohnalkova, A., Beveridge, T., Chang, I., Kim, B., Kim, K., Culley, D., Reed, S., Romine, M., Saffarini, D., Hill, E., Shi, L., Elias, D., Kennedy, D., Pinchuk, G., Watanabe, K., Ishii, S., Logan, B., Nealson, K. and Fredrickson, J., “Electrically conductive bacterial nanowires produced by Shewanella oneidensis strain MR-1 and other microorganisms”, Proceedings of the National Academy of Sciences, 103(30), pp.11358-11363, 2006.

[37] Cheng, S., Xing, D., Call, D. and Logan, B., “Direct Biological Conversion of Electrical Current into Methane by Electromethanogenesis”, Environmental Science & Technology, 43(10), pp.3953-3958, 2009.

[38] Rotaru, A., Shrestha, P., Liu, F., Shrestha, M., Shrestha, D., Embree, M., Zengler, K., Wardman, C., Nevin, K. and Lovley, D., “A new model for electron flow during anaerobic digestion: direct interspecies electron transfer to Methanosaeta for the reduction of carbon dioxide to methane”, Energy Environ. Sci., 7(1), pp.408-415, 2014.

[39] Rotaru, A., Shrestha, P., Liu, F., Markovaite, B., Chen, S., Nevin, K. and Lovley, D., “Direct Interspecies Electron Transfer between Geobacter metallireducens and Methanosarcina barkeri”, Applied and Environmental Microbiology, 80(15), pp.4599-4605, 2014.

[40] Zhao, Z., Zhang, Y., Li, Y., Dang, Y., Zhu, T. and Quan, X., “Potentially shifting from interspecies hydrogen transfer to direct interspecies electron transfer for syntrophic metabolism to resist acidic impact with conductive carbon cloth”, Chemical Engineering Journal, 313, pp.10-18, 2017.

[41] Shrestha, P., Malvankar, N., Werner, J., Franks, A., Elena-Rotaru, A., Shrestha, M., Liu, F., Nevin, K., Angenent, L. and Lovley, D., “Correlation between microbial community and granule conductivity in anaerobic bioreactors for brewery wastewater treatment”, Bioresource Technology, 174, pp.306-310, 2014.

[42] Zhao, Z., Zhang, Y., Woodard, T., Nevin, K. and Lovley, D., “Enhancing syntrophic metabolism in up-flow anaerobic sludge blanket reactors with conductive carbon materials”, Bioresource Technology, 191, pp.140-145, 2015.

[43] Zhao, Z., Zhang, Y., Wang, L. and Quan, X., “Potential for direct interspecies electron transfer in an electric-anaerobic system to increase methane production from sludge digestion”, Scientific Reports, 5(1), 2015.

[44] Nelabhotla, A., Bakke, R., and Dinamarca, C., “Performance Analysis of Biocathode in Bioelectrochemical CO2 Reduction”, Catalysts, 9(8), p.683, 2019.

[45] Rozendal, R., Hamelers, H., Rabaey, K., Keller, J. and Buisman, C., “Towards practical implementation of bioelectrochemical wastewater treatment”, Trends in Biotechnology, 26(8), pp.450-459, 2008.

[46] Nevin, K., Woodard, T., Franks, A., Summers, Z. and Lovley, D., “Microbial Electrosynthesis: Feeding Microbes Electricity To Convert Carbon Dioxide and Water to Multicarbon Extracellular Organic Compounds”, mBio, 1(2), 2010.

[47] Villano, M., Monaco, G., Aulenta, F. and Majone, M., “Electrochemically assisted methane production in a biofilm reactor. Journal of Power Sources, 196(22), pp.9467-9472, 2011.

[48] Bajracharya, S., Heijne, A., Dominguez Benetton, X., Vanbroekhoven, K., Buisman, C., Strik, D. and Pant, D., “Carbon dioxide reduction by mixed and pure cultures in microbial electrosynthesis using an assembly of graphite felt and stainless steel as a cathode”, Bioresource Technology, 195, pp.14-24, 2015.

[49] Jiang, Y., Su, M., Zhang, Y., Zhan, G., Tao, Y. and Li, D., “Bioelectrochemical systems for simultaneously production of methane and acetate from carbon dioxide at relatively high rate”, International Journal of Hydrogen Energy, 38(8), pp.3497-3502, 2013.

[50] Zhang, T. and Tremblay, P., "Possible Industrial Applications for Microbial Electrosynthesis From Carbon Dioxide", in Microbial Electrochemical Technology: Elsevier, pp. 825-842, 2019.

[51] Foutch, G. L., and Johannes, A. H. , "Reactors in process engineering," Encyclopedia of Physical Science and Technology, pp. 00654-2, 2003.

[52] Liu,S., "Batch Reactor - an overview”, ScienceDirect Topics, Sciencedirect, 2019 [Online]. Available: https://www.sciencedirect.com/topics/engineering/batch-reactor [Accessed: 10 May 2020].

[53] International Water Assocition, "Up Flow - Anaerobic Sludge Blanket Reactor (UASB)", IWA Publishing, 2019 [Online]. Available: https://www.iwapublishing.com/news/flow-anaerobic-sludge-blanket-reactor-uasb [Accessed: 10 May 2020].

[54] Endress+Hauser, "The digital compact sensor for pH measurement," 2019 [Online]. Available: https://www.endress.com/en/field-instruments-overview/liquid-analysis-product-overview/pH-digital-sensor-CPF81D [Accessed : 10 May 2020].

[55] Engineering Toolbox, "Resistivity and Conductivity - Temperature Coefficients for Common Materials", 2003 [Online]. Available: https://www.engineeringtoolbox.com/resistivity-conductivity-d_418.html [Accesse: 10 May 2020].

[56] Elobau U.S., Inc.,"Capacitive Level Sensor", Levelsensorsolutions.com, 2020 [Online]. Available: https://www.levelsensorsolutions.com/capacitive-level-sensor [Accessed: 10 May 2020].

[57] Universal Flow Monitors, Inc., "Magnetic Flowmeter Technology", Flowmeters.com, 2020 [Online]. Available: https://www.flowmeters.com/product-list.php?page=magnetic-technology/pg1-cid95.html=/asc_action=SetCurrCat/category_id=95 [Accessed: 10 May 2020].

[58] Industrial Sensing, "IR Multi-Gas Sensor NDIR Module", m-u-t GmbH, 2020 [Online]. Available: https://www.mut-gmbh.de/en/industrial-sensing/ir-multi-gas-sensor-ndir-module [Accesse: 10 May 2020].

[59] ENCE GmbH, "Main principles of pumps selection. Calculation of pumps", Ence-pumps.ru, 2020 [Online]. Available: https://ence-pumps.ru/en/podbor_raschet_nasosov/#main_design_parameters [Accessed: 10 May 2020].

[60] Sharma, M., Alvarez-Gallego, Y., Achouak, W., Pant, D., Sarma, P. and Dominguez-Benetton, X, "Electrode material properties for designing effective microbial electrosynthesis systems", Journal of Materials Chemistry A, vol. 7, no. 42, pp. 24420-24436, 2019.

[61] Suo, D., Fang, Z., Yu, Y. and Yong, Y., "Synthetic curli enables efficient microbial electrocatalysis with stainless-steel electrode", AIChE Journal, 2019.

[62] Zhang, Y., Merrill, M. and Logan, B., "The use and optimization of stainless steel mesh cathodes in microbial electrolysis cells", International Journal of Hydrogen Energy, vol. 35, no. 21, pp. 12020-12028, 2010.

[63] Qasim, S., "Wastewater Treatment Plants", 2nd ed. Florida 33431: CRC Press LLC, 1999.

[64] Pipoly, D., "8 Key Metals Used in Casting," Eagle group manufacturers, 2019 [Online]. Available: https://blog.eaglegroupmanufacturers.com/metals-you-should-know-8-key-metals-used-in-casting [Accessed: 16 May 2020].

[65] Maes, J., "18 Different Types of Metal," Make it from metal, 2019 [Online]. Available: https://makeitfrommetal.com/different-types-of-metal-facts-and-uses/ [Accessed: 16 May 2020].

[66] Perez, L., "Material of Construction Options for Chemical Process Plants," De Dietric Process Systems, 2019 [Online]. Available: https://www.ddpsinc.com/blog-0/material-of-construction-options-for-chemical-process-plants [Accessed: 16 May 2020].

[67] Pennsylvania State University, “Design guidelines for the selection and use of stainless steel”, Specialty Steel Industry of the United States, 1993.

[68] Kosmač, A.,” Stainless steels at high temperatures”, 1st ed. Brussels: Euro Inox, 2012.

[69] Allegheny Technologies Incorporated, "ATI 2205™ Duplex Stainless Steel", Atimetals.com, 2020 [Online]. Available: https://www.atimetals.com/Products/Documents/datasheets/stainless-specialty-steel/duplex/ati_2205_tds_en_v4.pdf [Accessed: 16 May 2020].

[70] Remove and Replace, “Stainless Steel Grades and Types", Removeandreplace.com, 2020 [Online]. Available: https://removeandreplace.com/2016/11/07/stainless-steel-grades-and-types/ [Accessed: 16 May 2020].

[71] AZoNetwork,"Search", AZoM Materials, search ss material by grade, 2020 [Online]. Available: https://www.azom.com/search.aspx?q [Accessed: 16- May- 2020].

[72] Australian Stainless Steel Development Association (ASSDA), "Grade 2205 for High Corrosion Resistance and Strength", Assda.asn.au, 2020 [Online]. Available: https://www.assda.asn.au/technical-info/grade-selection/grade-2205-for-high-corrosion-resistance-and-strength [Accessed: 16 May 2020].

[73] Wikipedia, "Plastic pipework", En.wikipedia.org, 2020 [Online]. Available: https://en.wikipedia.org/wiki/Plastic_pipework#uPVC_(unplasticized_polyvinyl_chloride) [Accessed: 17 May 2020].

[74] Andersen, H., Jakobsen, K., Saif, M., and Hansen, O., "Preliminary design of a bioelectrochemical reactor," University of South-Eastern Norway (USN), Campus Porsgrunn, Master Academic Project, 2019.

[75] Towler, G., and Sinnott, R., “Chemical engineering design: principles, practice and economics of plant and process design”, Elsevier, 2012.

[76] Peshin, A., "How Much Current Can The Human Body Withstand?," Science ABC, 2020 [Online]. Available: https://www.scienceabc.com/humans/how-many-volts-amps-kill-you-human.html [Accessed: 19 May 2020].

[77] Miljødirektoratet, "Metan (CH4)", Miljøstatus, 2020 [Online]. Available: https://miljostatus.miljodirektoratet.no/metan [Accessed: 19 May 2020].

[78] Eldrup, N.H., “Installation Factor Sheet”, Project Management and Cost Engineering (Master's Course). University of SouthEastern Norway (USN), Porsgrunn, Norway, 2019.

[79] Shandong Jinxiu Shanhe Environmental Engineering Co., Ltd., “Wastewater treatment stainless steel carbon steel uasb anaerobic reactor”, Alibaba.com, 2020 [Online]. Available: https://www.alibaba.com/product-detail/Wastewater-treatment-stainless-steel-carbon-

steel_62335666280.html?spm=a2700.galleryofferlist.0.0.33514f8exbbeIC&bypass=true [Accessed: 20 May 2020].

[80] Shandong Jinxiu Shanhe Environmental Engineering Co., Ltd., “Stainless Steel Acid Waste Water Treatment Liquid Centrifugal Pump”, Alibaba.com, 2020 [Online]. Available: https://www.alibaba.com/product-detail/Stainless-Steel-Acid-Waste-Water-Treatment_62432001805.html?spm=a2700.galleryofferlist.0.0.6570383d4cLvSJ&bypass=true [Accessed: 20 May 2020].

[81] JiangSu CunRui Metal Products Co., Ltd., “Stainless Steel Sheets”, Alibaba.com, 2020 [Online]. Available: https://www.alibaba.com/product-detail/ss-sheet-304-grade-s32750-ss_62341169245.html?spm=a2700.galleryofferlist.0.0.6598426dHhrCHC&bypass=true [Accessed: 20 May 2020].

[82] Norges Bank, "Exchange rates", Norges-bank.no, 2020 [Online]. Available: https://www.norges-bank.no/en/topics/Statistics/exchange_rates/?tab=currency&id=USD [Accessed: 21 May 2020].

[83] Statistics Norway (Statistisk sentralbyrå), "2020-05-11", ssb.no, 2020 [Online]. Available: https://www.ssb.no/en/kpi [Accessed: 21 May 2020].

[84] AACE International, "Classification of capitol cost estimates," AACE, 2019.

[85] Shindell, D. and Fuglestvedt, J., "The social cost of methane: theory and applications", 2017 [Online]. Available: https://www.ncbi.nlm.nih.gov/pubmed/28581559 [Accessed: 21 May 2020].

[86] Engineering Toolbox, "Methane - Density and Specific Weight," 2018 [Online]. Available: https://www.engineeringtoolbox.com/methane-density-specific-weight-temperature-pressure-d_2020.html [Accessed: 21 May 2020].

[87] Dębowski, M., Szwaja, S., Zieliński, M., Kisielewska, M., Stańczyk-Mazanek, E., “The Influence of Anaerobic Digestion Effluents (ADEs) Used as the Nutrient Sources for Chlorella sp. Cultivation on Fermentative Biogas Production”, Waste Biomass Valorization, 2017, 8, 1153–1161.

[88] Aryal, N., Ammam, F., Patil, S. and Pant, D., "An overview of cathode materials for microbial electrosynthesis of chemicals from carbon dioxide", Green Chemistry, vol. 19, no. 24, pp. 5748-5760, 2017. Available: 10.1039/c7gc01801k.

[89] Ali, H., Eldrup, N. H., Normann, F., Andersson, V., Skagestad, R., Mathisen, A. and Øi, L. E., "Cost estimation of heat recovery networks for utilization of industrial excess heat for carbon dioxide absorption", International Journal of Greenhouse Gas Control, vol. 74, pp. 219-228, 2018. Available: 10.1016/j.ijggc.2018.05.003.

Appendices

Appendix A: Assignment task

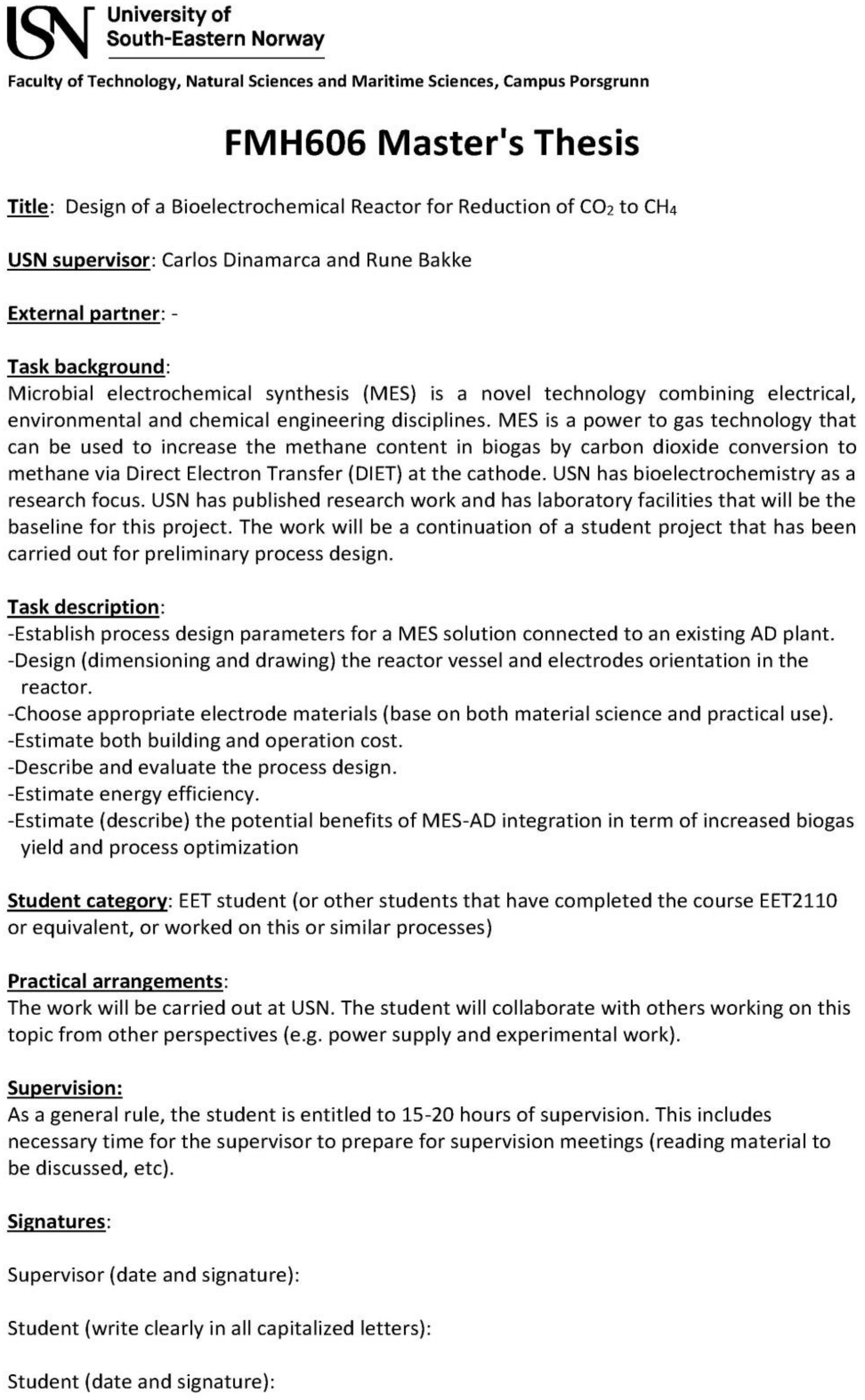

University of
South-Eastern Norway

Faculty of Technology, Natural Sciences and Maritime Sciences, Campus Porsgrunn

FMH606 Master's Thesis

Title: Design of a Bioelectrochemical Reactor for Reduction of CO_2 to CH_4

USN supervisor: Carlos Dinamarca and Rune Bakke

External partner: -

Task background:
Microbial electrochemical synthesis (MES) is a novel technology combining electrical, environmental and chemical engineering disciplines. MES is a power to gas technology that can be used to increase the methane content in biogas by carbon dioxide conversion to methane via Direct Electron Transfer (DIET) at the cathode. USN has bioelectrochemistry as a research focus. USN has published research work and has laboratory facilities that will be the baseline for this project. The work will be a continuation of a student project that has been carried out for preliminary process design.

Task description:
-Establish process design parameters for a MES solution connected to an existing AD plant.
-Design (dimensioning and drawing) the reactor vessel and electrodes orientation in the reactor.
-Choose appropriate electrode materials (base on both material science and practical use).
-Estimate both building and operation cost.
-Describe and evaluate the process design.
-Estimate energy efficiency.
-Estimate (describe) the potential benefits of MES-AD integration in term of increased biogas yield and process optimization

Student category: EET student (or other students that have completed the course EET2110 or equivalent, or worked on this or similar processes)

Practical arrangements:
The work will be carried out at USN. The student will collaborate with others working on this topic from other perspectives (e.g. power supply and experimental work).

Supervision:
As a general rule, the student is entitled to 15-20 hours of supervision. This includes necessary time for the supervisor to prepare for supervision meetings (reading material to be discussed, etc).

Signatures:

Supervisor (date and signature):

Student (write clearly in all capitalized letters):

Student (date and signature):

Appendix B: Pump power calculation

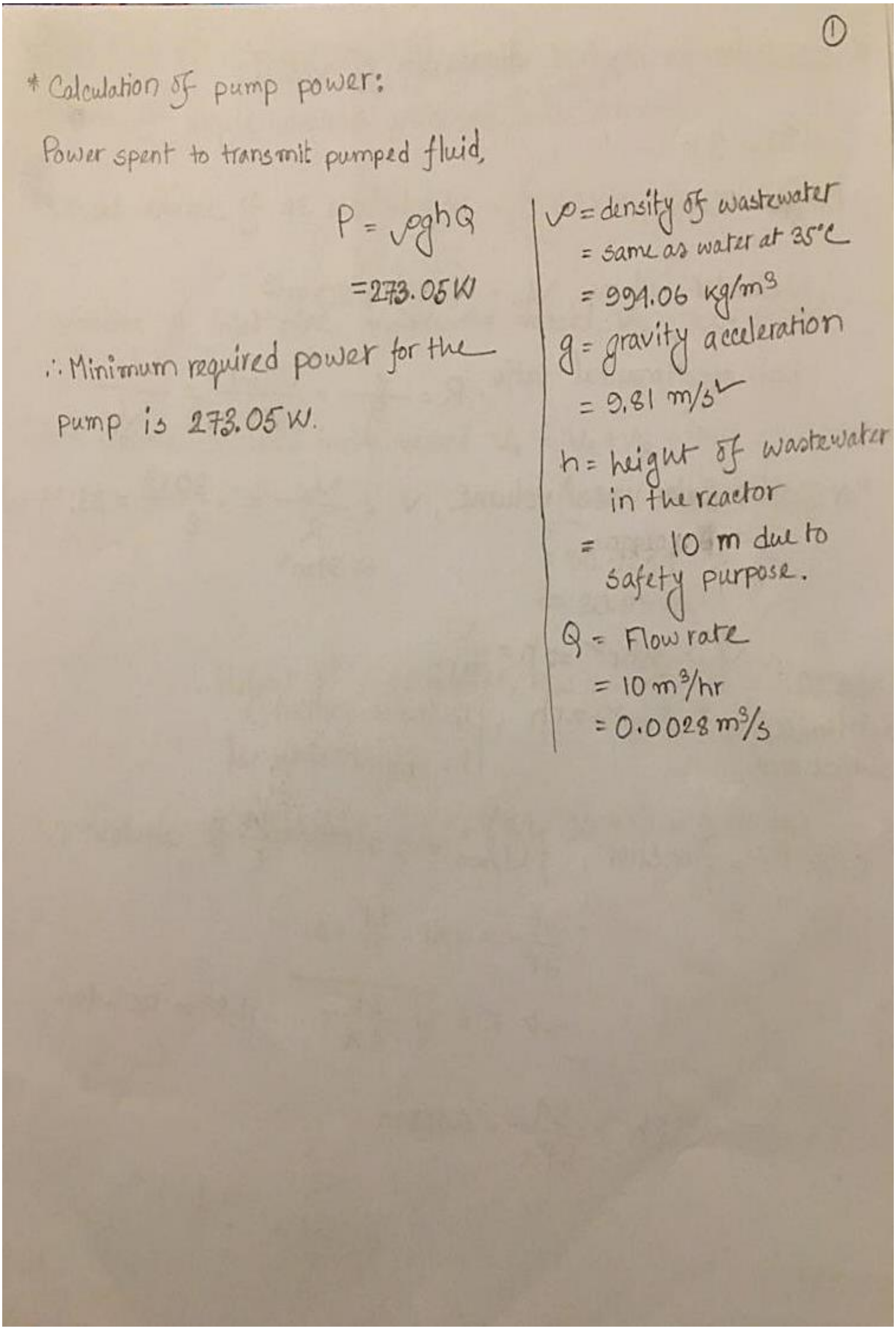

①

* Calculation of pump power:

Power spent to transmit pumped fluid,

$$P = \rho g h Q$$
$$= 273.05\ W$$

∴ Minimum required power for the pump is 273.05 W.

ρ = density of wastewater
= same as water at 35°C
= $994.06\ kg/m^3$

g = gravity acceleration
= $9.81\ m/s^2$

h = height of wastewater in the reactor
= 10 m due to safety purpose.

Q = Flow rate
= $10\ m^3/hr$
= $0.0028\ m^3/s$

Appendix C: Design calculation

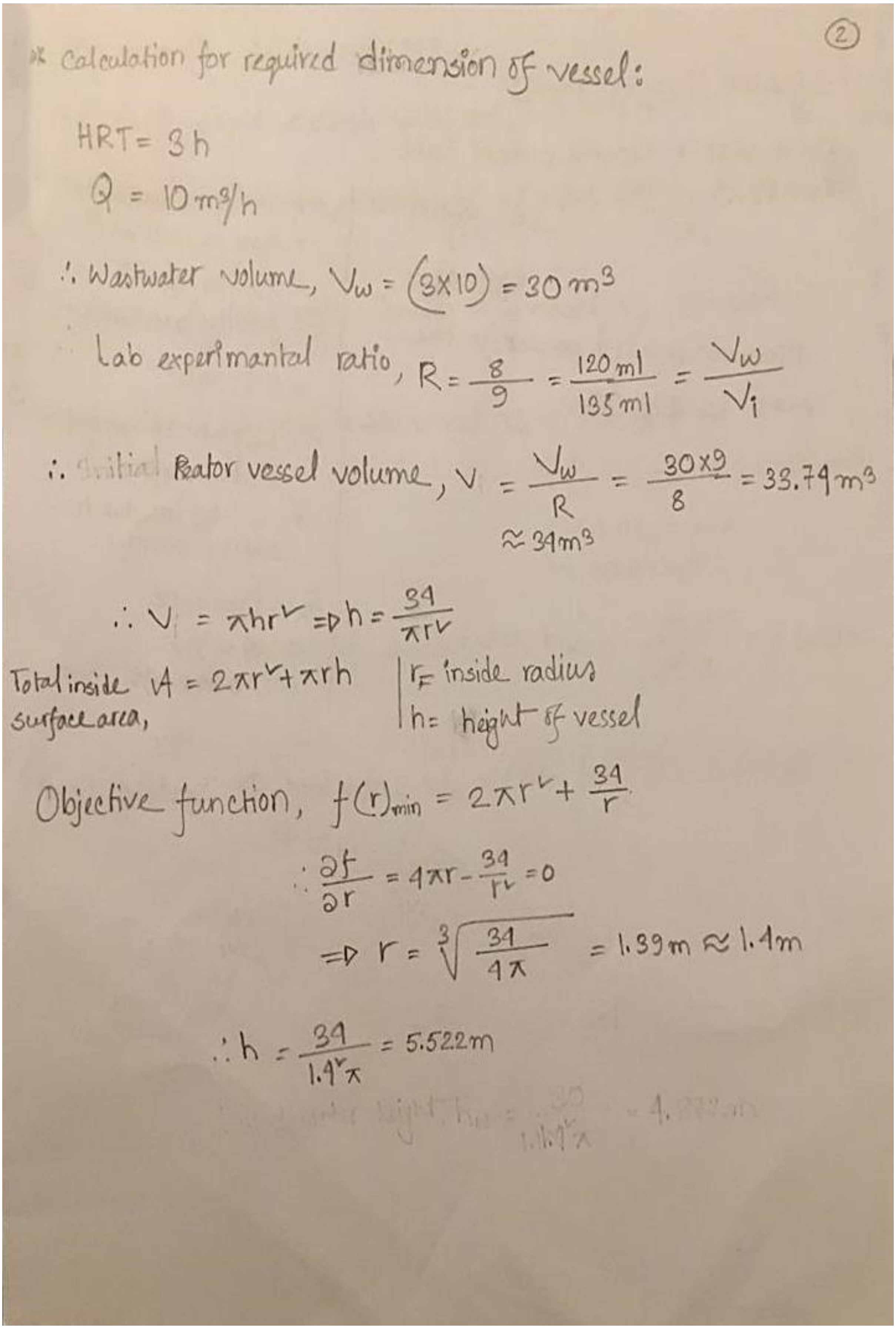

②

* Calculation for required dimension of vessel:

HRT = 3 h

$Q = 10 \, m^3/h$

$\therefore$ Wastwater volume, $V_w = (3 \times 10) = 30 \, m^3$

Lab experimantal ratio, $R = \frac{8}{9} = \frac{120 \, ml}{135 \, ml} = \frac{V_w}{V_1}$

$\therefore$ Initial Reator vessel volume, $V = \frac{V_w}{R} = \frac{30 \times 9}{8} = 33.79 \, m^3$

$\approx 34 \, m^3$

$\therefore V = \pi h r^2 \Rightarrow h = \frac{34}{\pi r^2}$

Total inside surface area, $A = 2\pi r^2 + \pi r h$

$r =$ inside radius

$h =$ height of vessel

Objective function, $f(r)_{min} = 2\pi r^2 + \frac{34}{r}$

$\therefore \frac{\partial f}{\partial r} = 4\pi r - \frac{34}{r^2} = 0$

$\Rightarrow r = \sqrt[3]{\frac{34}{4\pi}} = 1.39 \, m \approx 1.4 \, m$

$\therefore h = \frac{34}{1.4^2 \pi} = 5.522 \, m$

[illegible] hight, $h_w = \frac{30}{1.4^2 \pi} = 4.$[illegible]

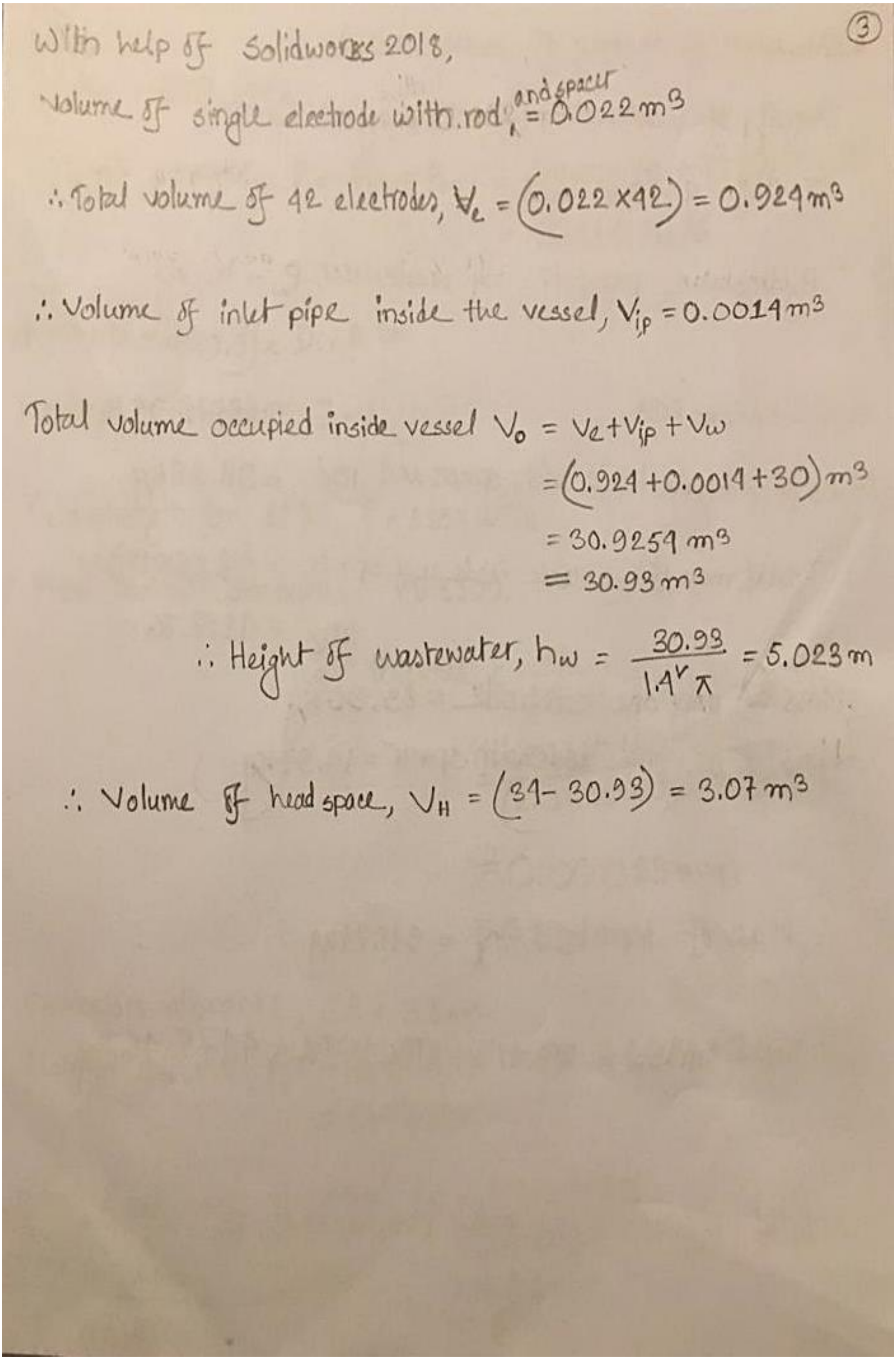

③

With help of Solidworks 2018,

Volume of single electrode with rod and spacer $= 0.022 m^3$

∴ Total volume of 42 electrodes, $V_e = (0.022 \times 42) = 0.924 m^3$

∴ Volume of inlet pipe inside the vessel, $V_{ip} = 0.0014 m^3$

Total volume occupied inside vessel $V_o = V_e + V_{ip} + V_w$

$$= (0.924 + 0.0014 + 30) m^3$$

$$= 30.9254 m^3$$

$$= 30.93 m^3$$

∴ Height of wastewater, $h_w = \frac{30.93}{1.4^{r} \pi} = 5.023 m$

∴ Volume of head space, $V_H = (34 - 30.93) = 3.07 m^3$

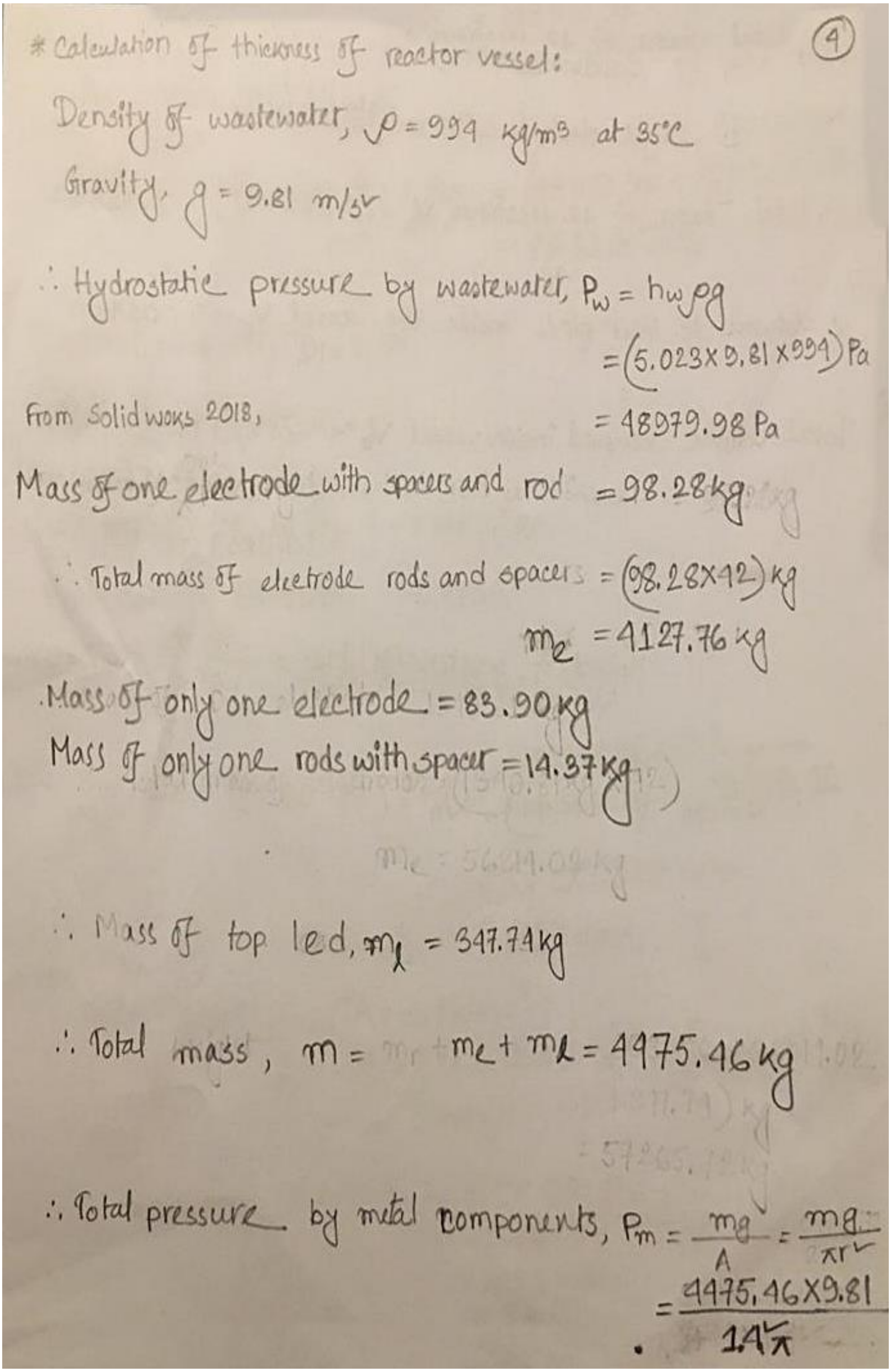

* Calculation of thickness of reactor vessel: ④

Density of wastewater, $\rho = 994\ kg/m^3$ at 35°C

Gravity, $g = 9.81\ m/s^2$

∴ Hydrostatic pressure by wastewater, $P_w = h_w \rho g$

$= (5.023 \times 9.81 \times 994)\ Pa$

From Solidwoks 2018,

$= 48979.98\ Pa$

Mass of one electrode with spacers and rod $= 98.28\ kg$

∴ Total mass of electrode rods and spacers $= (98.28 \times 42)\ kg$

$m_e = 4127.76\ kg$

Mass of only one electrode $= 83.90\ kg$

Mass of only one rods with spacer $= 14.37\ kg$

∴ Mass of top led, $m_l = 347.74\ kg$

∴ Total mass, $m = m_e + m_l = 4475.46\ kg$

∴ Total pressure by metal components, $P_m = \frac{mg}{A} = \frac{mg}{\pi r^2}$

$$= \frac{4475.46 \times 9.81}{1.4^2 \pi}$$

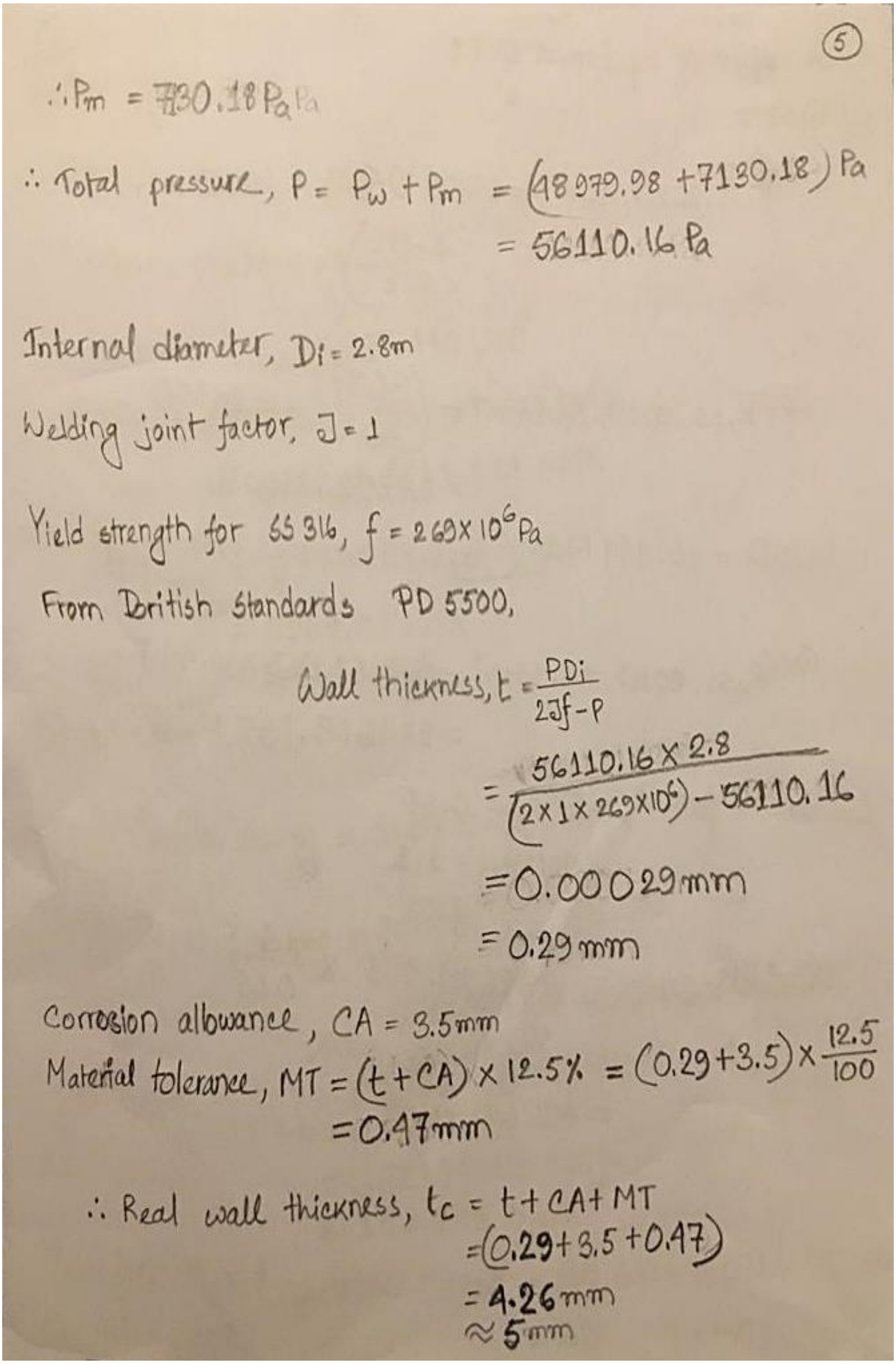

⑤

$\therefore P_m = 7130.18$ Pa

$\therefore$ Total pressure, $P = P_w + P_m = (48979.98 + 7130.18)$ Pa

$= 56110.16$ Pa

Internal diameter, $D_i = 2.8$m

Welding joint factor, $J = 1$

Yield strength for SS 316, $f = 269 \times 10^6$ Pa

From British Standards PD 5500,

Wall thickness, $t = \frac{PD_i}{2Jf - P}$

$= \frac{56110.16 \times 2.8}{(2 \times 1 \times 269 \times 10^6) - 56110.16}$

$= 0.00029$ mm

$= 0.29$ mm

Corrosion allowance, $CA = 3.5$mm

Material tolerance, $MT = (t + CA) \times 12.5\% = (0.29 + 3.5) \times \frac{12.5}{100}$

$= 0.47$mm

$\therefore$ Real wall thickness, $t_c = t + CA + MT$

$= (0.29 + 3.5 + 0.47)$

$= 4.26$ mm

≈ 5 mm

Appendix D: Installation factor sheet 2016

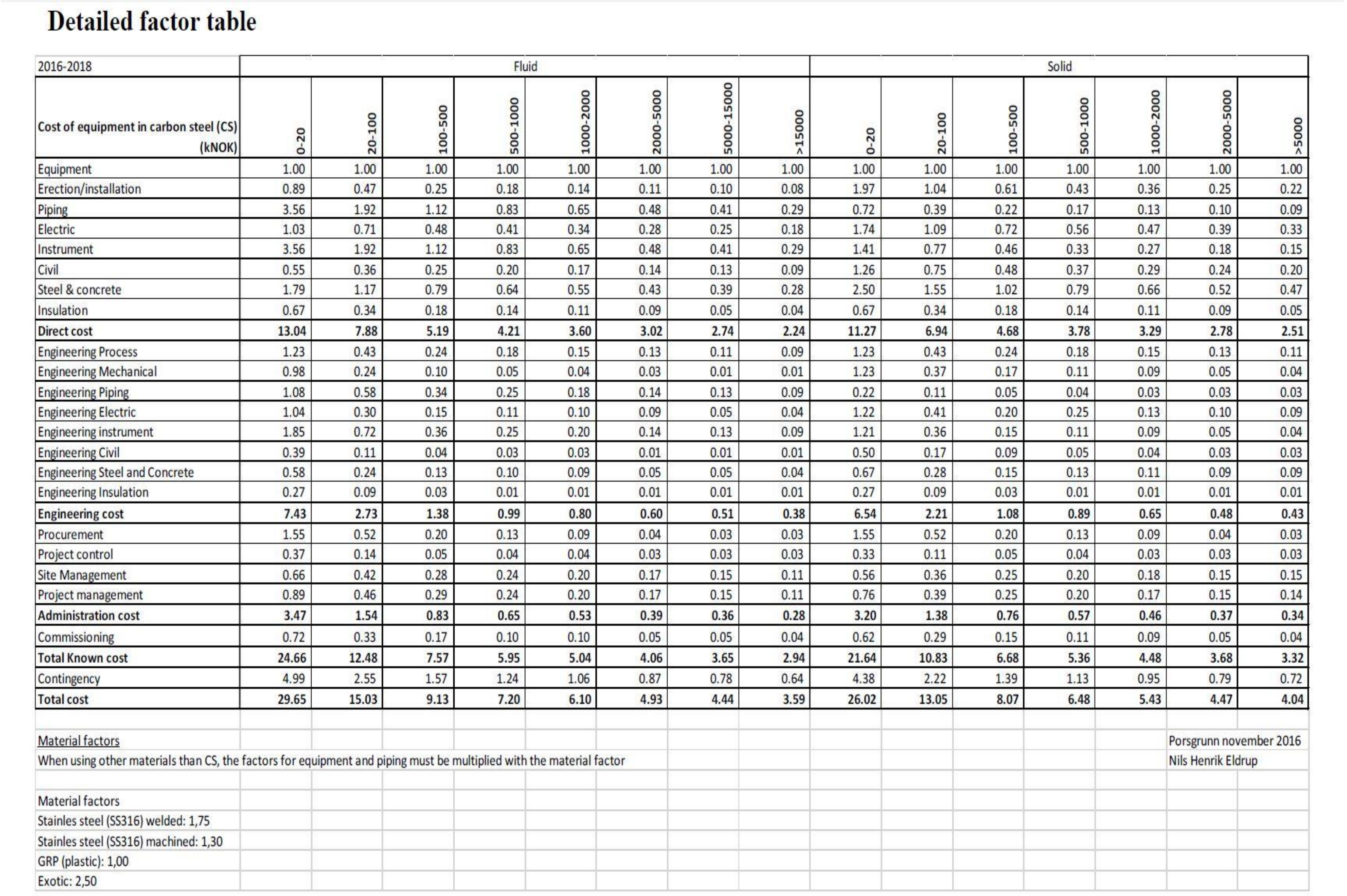

Detailed factor table

2016-2018	Fluid								Solid						
Cost of equipment in carbon steel (CS) (kNOK)	0-20	20-100	100-500	500-1000	1000-2000	2000-5000	5000-15000	>15000	0-20	20-100	100-500	500-1000	1000-2000	2000-5000	>5000
Equipment	1.00	1.00	1.00	1.00	1.00	1.00	1.00	1.00	1.00	1.00	1.00	1.00	1.00	1.00	1.00
Erection/installation	0.89	0.47	0.25	0.18	0.14	0.11	0.10	0.08	1.97	1.04	0.61	0.43	0.36	0.25	0.22
Piping	3.56	1.92	1.12	0.83	0.65	0.48	0.41	0.29	0.72	0.39	0.22	0.17	0.13	0.10	0.09
Electric	1.03	0.71	0.48	0.41	0.34	0.28	0.25	0.18	1.74	1.09	0.72	0.56	0.47	0.39	0.33
Instrument	3.56	1.92	1.12	0.83	0.65	0.48	0.41	0.29	1.41	0.77	0.46	0.33	0.27	0.18	0.15
Civil	0.55	0.36	0.25	0.20	0.17	0.14	0.13	0.09	1.26	0.75	0.48	0.37	0.29	0.24	0.20
Steel & concrete	1.79	1.17	0.79	0.64	0.55	0.43	0.39	0.28	2.50	1.55	1.02	0.79	0.66	0.52	0.47
Insulation	0.67	0.34	0.18	0.14	0.11	0.09	0.05	0.04	0.67	0.34	0.18	0.14	0.11	0.09	0.05
Direct cost	**13.04**	**7.88**	**5.19**	**4.21**	**3.60**	**3.02**	**2.74**	**2.24**	**11.27**	**6.94**	**4.68**	**3.78**	**3.29**	**2.78**	**2.51**
Engineering Process	1.23	0.43	0.24	0.18	0.15	0.13	0.11	0.09	1.23	0.43	0.24	0.18	0.15	0.13	0.11
Engineering Mechanical	0.98	0.24	0.10	0.05	0.04	0.03	0.01	0.01	1.23	0.37	0.17	0.11	0.09	0.05	0.04
Engineering Piping	1.08	0.58	0.34	0.25	0.18	0.14	0.13	0.09	0.22	0.11	0.05	0.04	0.03	0.03	0.03
Engineering Electric	1.04	0.30	0.15	0.11	0.10	0.09	0.05	0.04	1.22	0.41	0.20	0.25	0.13	0.10	0.09
Engineering instrument	1.85	0.72	0.36	0.25	0.20	0.14	0.13	0.09	1.21	0.36	0.15	0.11	0.09	0.05	0.04
Engineering Civil	0.39	0.11	0.04	0.03	0.03	0.01	0.01	0.01	0.50	0.17	0.09	0.05	0.04	0.03	0.03
Engineering Steel and Concrete	0.58	0.24	0.13	0.10	0.09	0.05	0.05	0.04	0.67	0.28	0.15	0.13	0.11	0.09	0.09
Engineering Insulation	0.27	0.09	0.03	0.01	0.01	0.01	0.01	0.01	0.27	0.09	0.03	0.01	0.01	0.01	0.01
Engineering cost	**7.43**	**2.73**	**1.38**	**0.99**	**0.80**	**0.60**	**0.51**	**0.38**	**6.54**	**2.21**	**1.08**	**0.89**	**0.65**	**0.48**	**0.43**
Procurement	1.55	0.52	0.20	0.13	0.09	0.04	0.03	0.03	1.55	0.52	0.20	0.13	0.09	0.04	0.03
Project control	0.37	0.14	0.05	0.04	0.04	0.03	0.03	0.03	0.33	0.11	0.05	0.04	0.03	0.03	0.03
Site Management	0.66	0.42	0.28	0.24	0.20	0.17	0.15	0.11	0.56	0.36	0.25	0.20	0.18	0.15	0.15
Project management	0.89	0.46	0.29	0.24	0.20	0.17	0.15	0.11	0.76	0.39	0.25	0.20	0.17	0.15	0.14
Administration cost	**3.47**	**1.54**	**0.83**	**0.65**	**0.53**	**0.39**	**0.36**	**0.28**	**3.20**	**1.38**	**0.76**	**0.57**	**0.46**	**0.37**	**0.34**
Commissioning	0.72	0.33	0.17	0.10	0.10	0.05	0.05	0.04	0.62	0.29	0.15	0.11	0.09	0.05	0.04
Total Known cost	**24.66**	**12.48**	**7.57**	**5.95**	**5.04**	**4.06**	**3.65**	**2.94**	**21.64**	**10.83**	**6.68**	**5.36**	**4.48**	**3.68**	**3.32**
Contingency	4.99	2.55	1.57	1.24	1.06	0.87	0.78	0.64	4.38	2.22	1.39	1.13	0.95	0.79	0.72
Total cost	**29.65**	**15.03**	**9.13**	**7.20**	**6.10**	**4.93**	**4.44**	**3.59**	**26.02**	**13.05**	**8.07**	**6.48**	**5.43**	**4.47**	**4.04**

Material factors

When using other materials than CS, the factors for equipment and piping must be multiplied with the material factor

Porsgrunn november 2016
Nils Henrik Eldrup

Material factors
Stainles steel (SS316) welded: 1,75
Stainles steel (SS316) machined: 1,30
GRP (plastic): 1,00
Exotic: 2,50

Appendix E: Cost estimation calculation

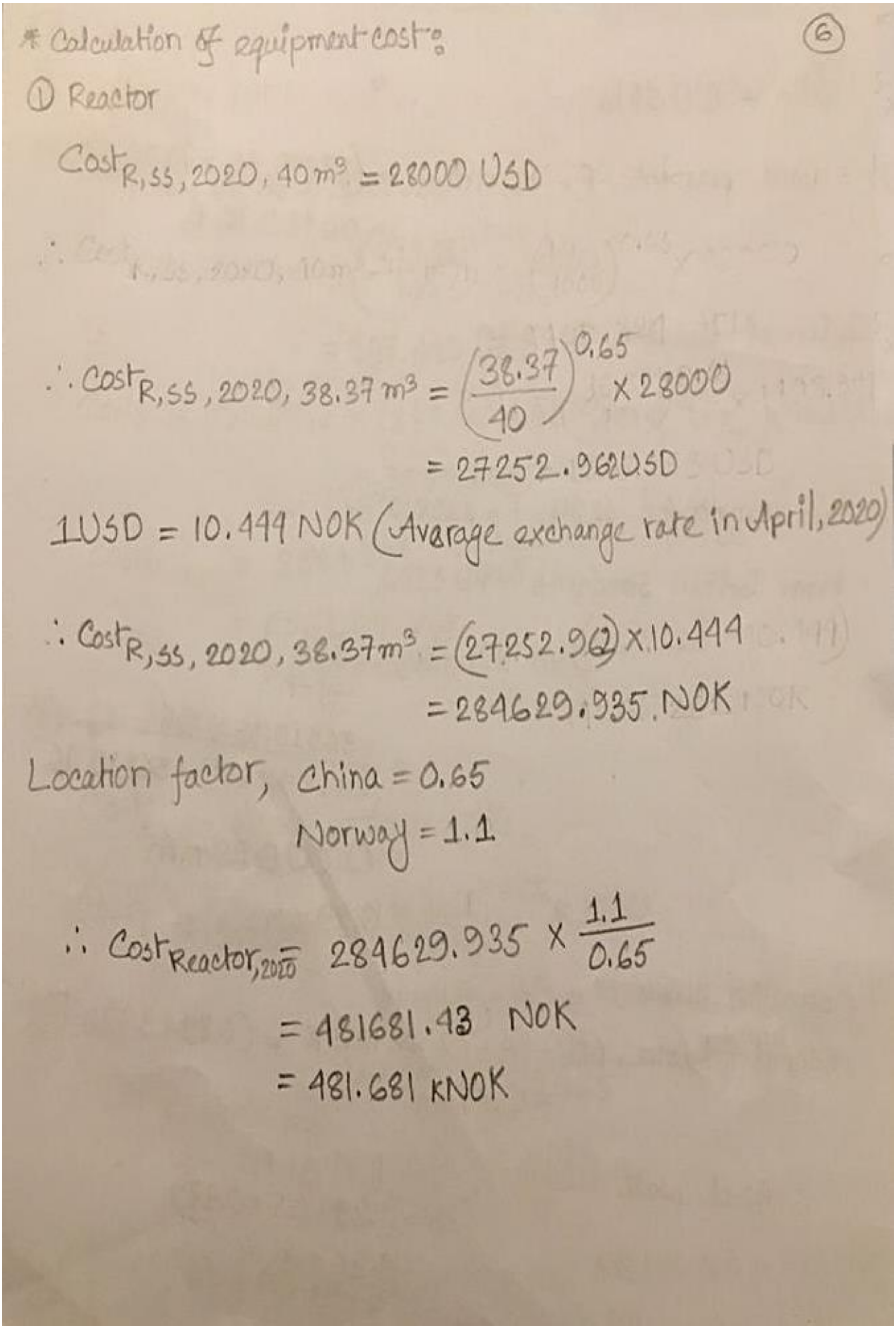

⑥

* Calculation of equipment cost:

① Reactor

$Cost_{R,SS,2020,40m^3} = 28000$ USD

$$\therefore Cost_{R,SS,2020,38.37m^3} = \left(\frac{38.37}{40}\right)^{0.65} \times 28000$$

$= 27252.962$ USD

1USD = 10.444 NOK (Avarage exchange rate in April, 2020)

$$\therefore Cost_{R,SS,2020,38.37m^3} = (27252.962) \times 10.444$$

$= 284629.935$ NOK

Location factor, China = 0.65

Norway = 1.1

$$\therefore Cost_{Reactor,2020} = 284629.935 \times \frac{1.1}{0.65}$$

$= 481681.43$ NOK

$= 481.681$ kNOK

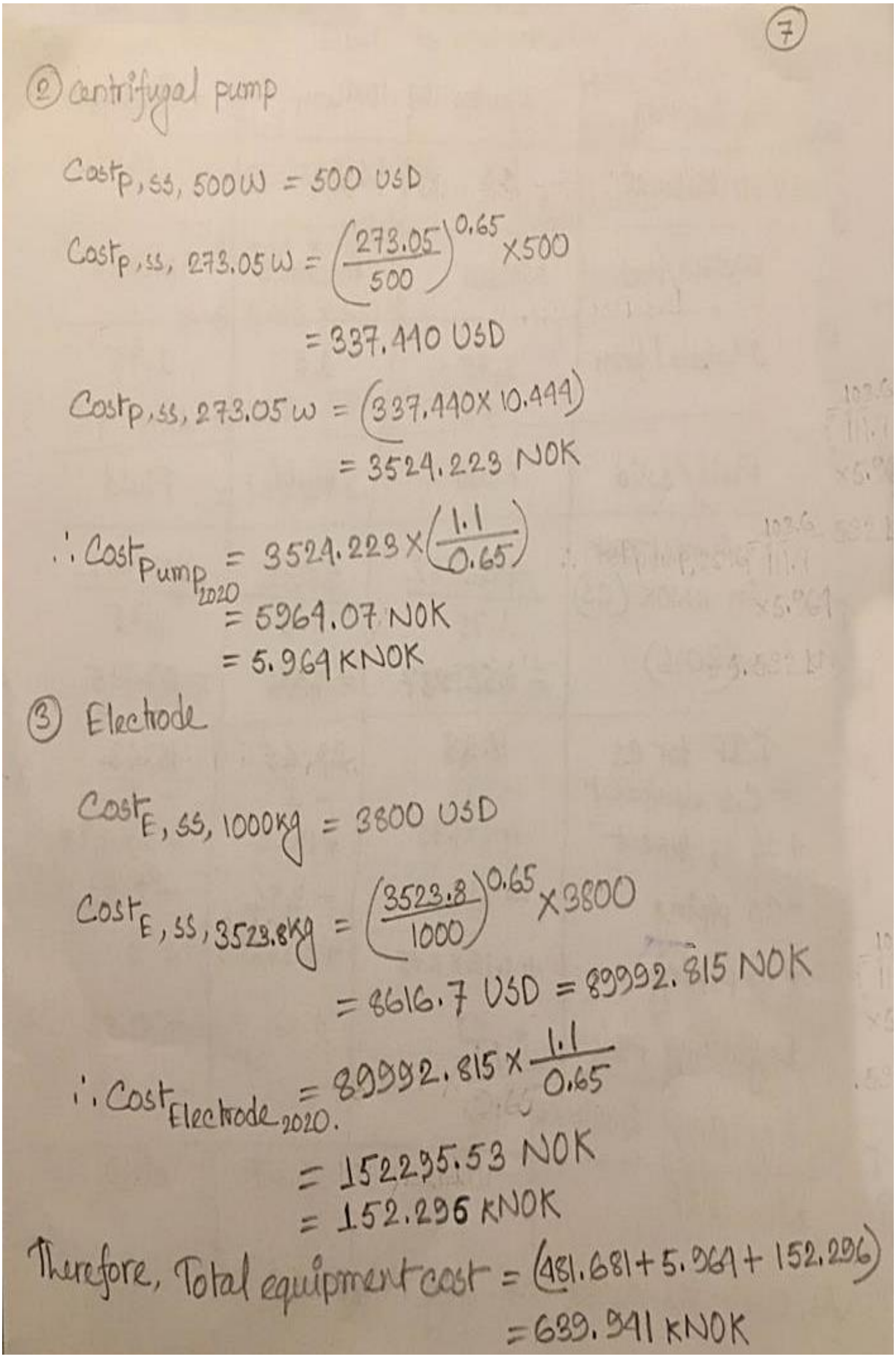

⑦

② centrifugal pump

$Cost_{P,SS,500W} = 500\ USD$

$Cost_{P,SS,273.05W} = \left(\frac{273.05}{500}\right)^{0.65} \times 500$

$= 337.440\ USD$

$Cost_{P,SS,273.05W} = (337.440 \times 10.444)$

$= 3524.223\ NOK$

$\therefore Cost_{Pump_{2020}} = 3524.223 \times \left(\frac{1.1}{0.65}\right)$

$= 5964.07\ NOK$

$= 5.964\ kNOK$

③ Electrode

$Cost_{E,SS,1000kg} = 3800\ USD$

$Cost_{E,SS,3523.8kg} = \left(\frac{3523.8}{1000}\right)^{0.65} \times 3800$

$= 8616.7\ USD = 89992.815\ NOK$

$\therefore Cost_{Electrode_{2020}} = 89992.815 \times \frac{1.1}{0.65}$

$= 152295.53\ NOK$

$= 152.296\ kNOK$

Therefore, Total equipment cost $= (481.681 + 5.964 + 152.296)$

$= 639.941\ kNOK$

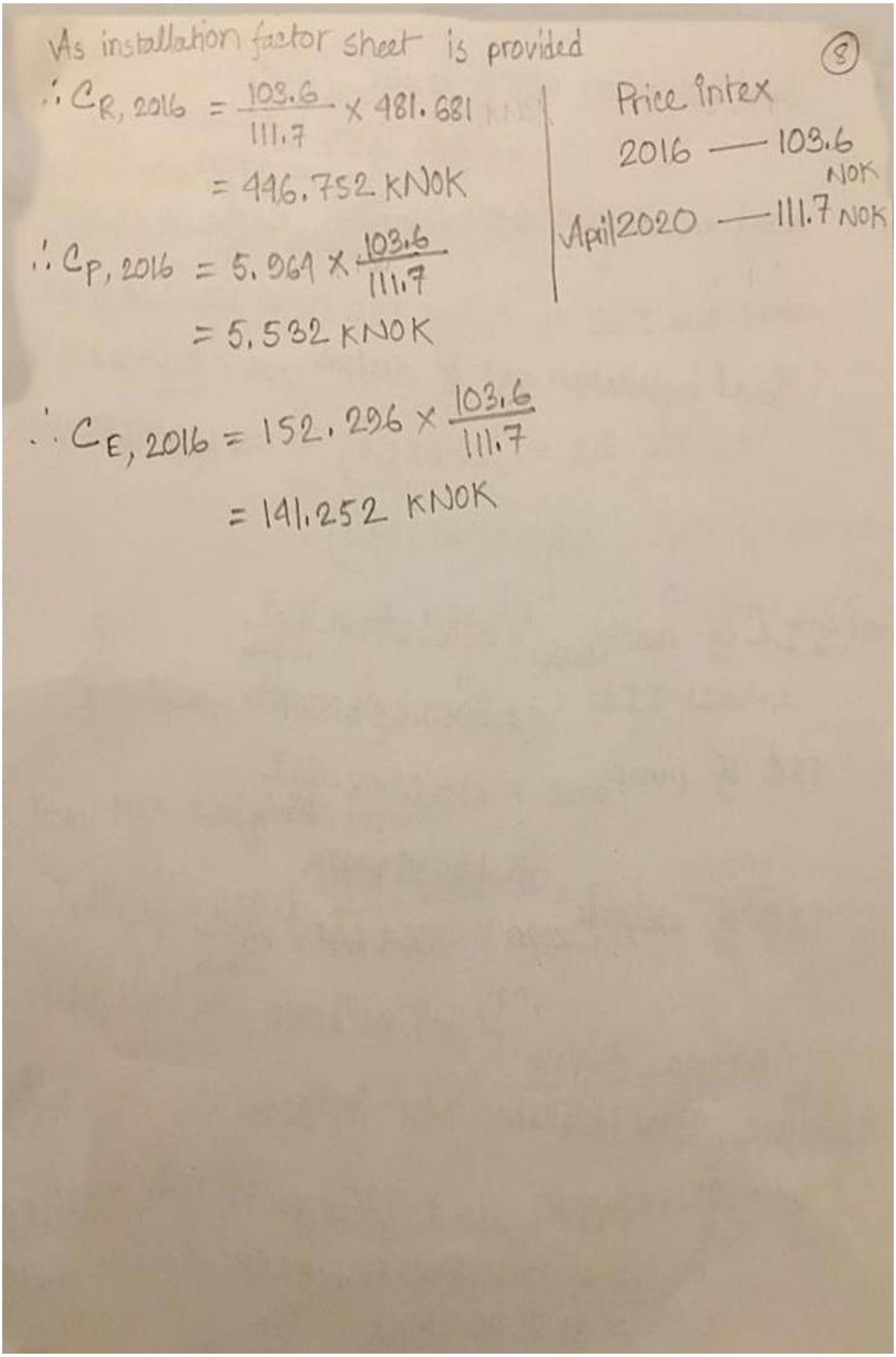

✓As installation factor sheet is provided ⑧

$\therefore C_{R,2016} = \frac{103.6}{111.7} \times 481.681$

$= 446.752$ KNOK

$\therefore C_{P,2016} = 5.964 \times \frac{103.6}{111.7}$

$= 5.532$ KNOK

$\therefore C_{E,2016} = 152.296 \times \frac{103.6}{111.7}$

$= 141.252$ KNOK

Price intex

2016 — 103.6 NOK

✓April2020 — 111.7 NOK

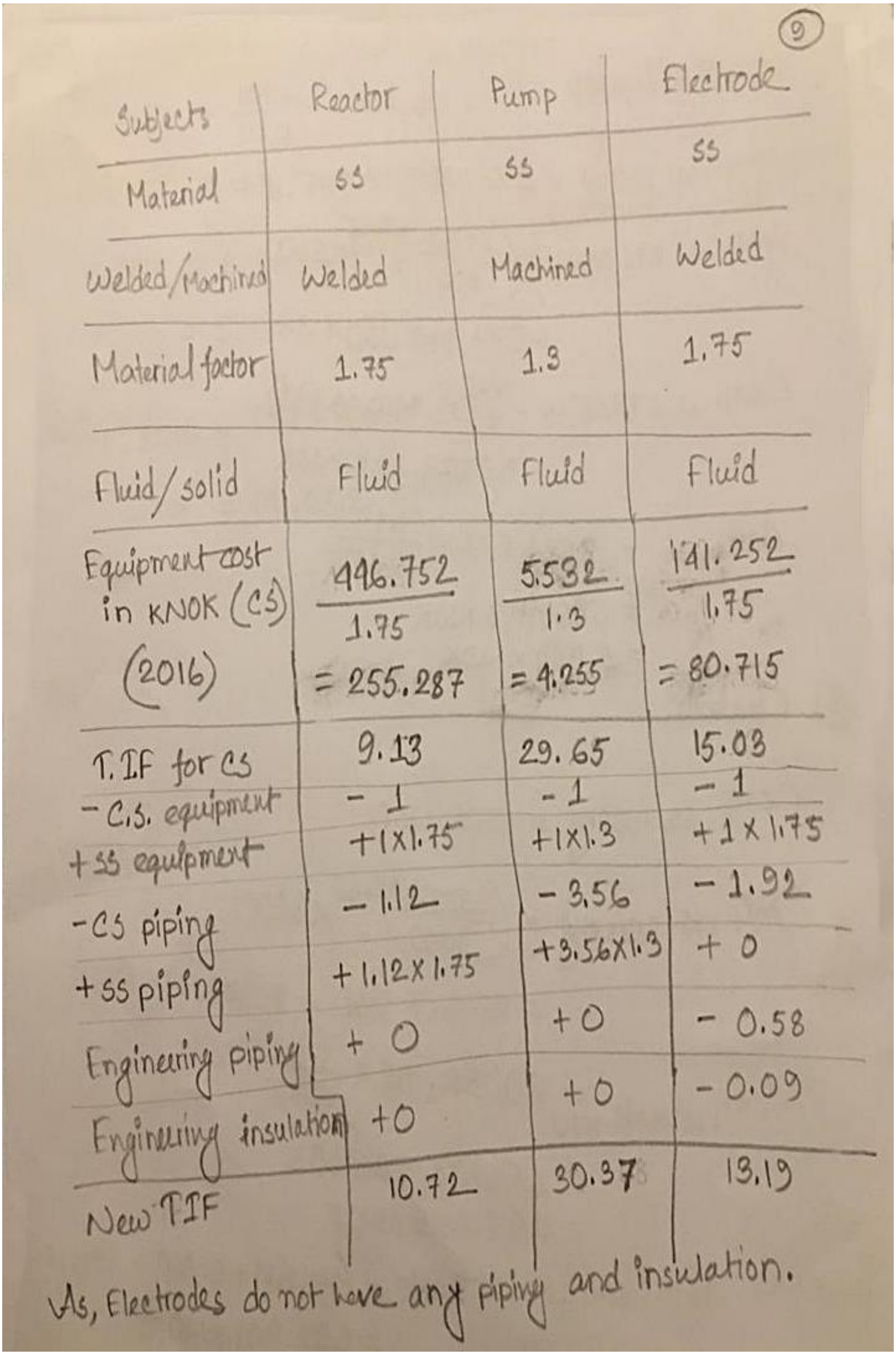

⑨

Subjects	Reactor	Pump	Electrode
Material	SS	SS	SS
Welded/Machined	Welded	Machined	Welded
Material factor	1.75	1.3	1.75
Fluid/solid	Fluid	Fluid	Fluid
Equipment cost in KNOK (CS) (2016)	$\frac{446.752}{1.75}$ = 255.287	$\frac{5.532}{1.3}$ = 4.255	$\frac{141.252}{1.75}$ = 80.715
T.IF for CS	9.13	29.65	15.03
- C.S. equipment	- 1	- 1	- 1
+ SS equipment	+ 1 × 1.75	+ 1 × 1.3	+ 1 × 1.75
- CS piping	- 1.12	- 3.56	- 1.92
+ SS piping	+ 1.12 × 1.75	+ 3.56 × 1.3	+ 0
Engineering piping	+ 0	+ 0	- 0.58
Engineering insulation	+ 0	+ 0	- 0.09
New TIF	10.72	30.37	13.19

As, Electrodes do not have any piping and insulation.

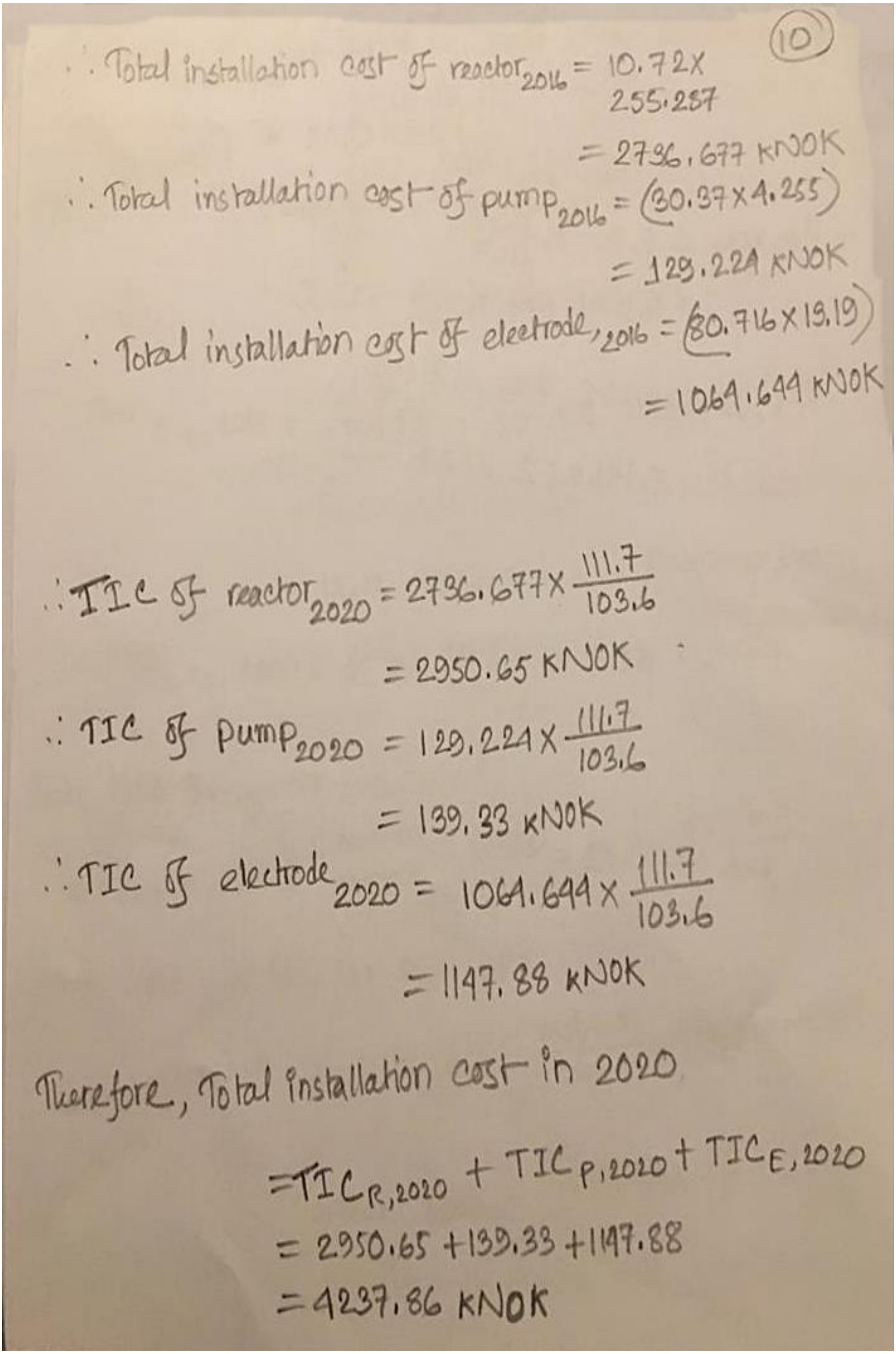

⑩

$\therefore$ Total installation cost of $\text{reactor}_{2016} = 10.72 \times 255.287$

$= 2736.677$ kNOK

$\therefore$ Total installation cost of $\text{pump}_{2016} = (30.37 \times 4.255)$

$= 129.224$ kNOK

$\therefore$ Total installation cost of $\text{electrode},_{2016} = (80.716 \times 13.19)$

$= 1064.644$ kNOK

$\therefore$ TIC of $\text{reactor}_{2020} = 2736.677 \times \frac{111.7}{103.6}$

$= 2950.65$ kNOK

$\therefore$ TIC of $\text{pump}_{2020} = 129.224 \times \frac{111.7}{103.6}$

$= 139.33$ kNOK

$\therefore$ TIC of $\text{electrode}_{2020} = 1064.644 \times \frac{111.7}{103.6}$

$= 1147.88$ kNOK

Therefore, Total installation cost in 2020

$= TIC_{R,2020} + TIC_{P,2020} + TIC_{E,2020}$

$= 2950.65 + 139.33 + 1147.88$

$= 4237.86$ kNOK

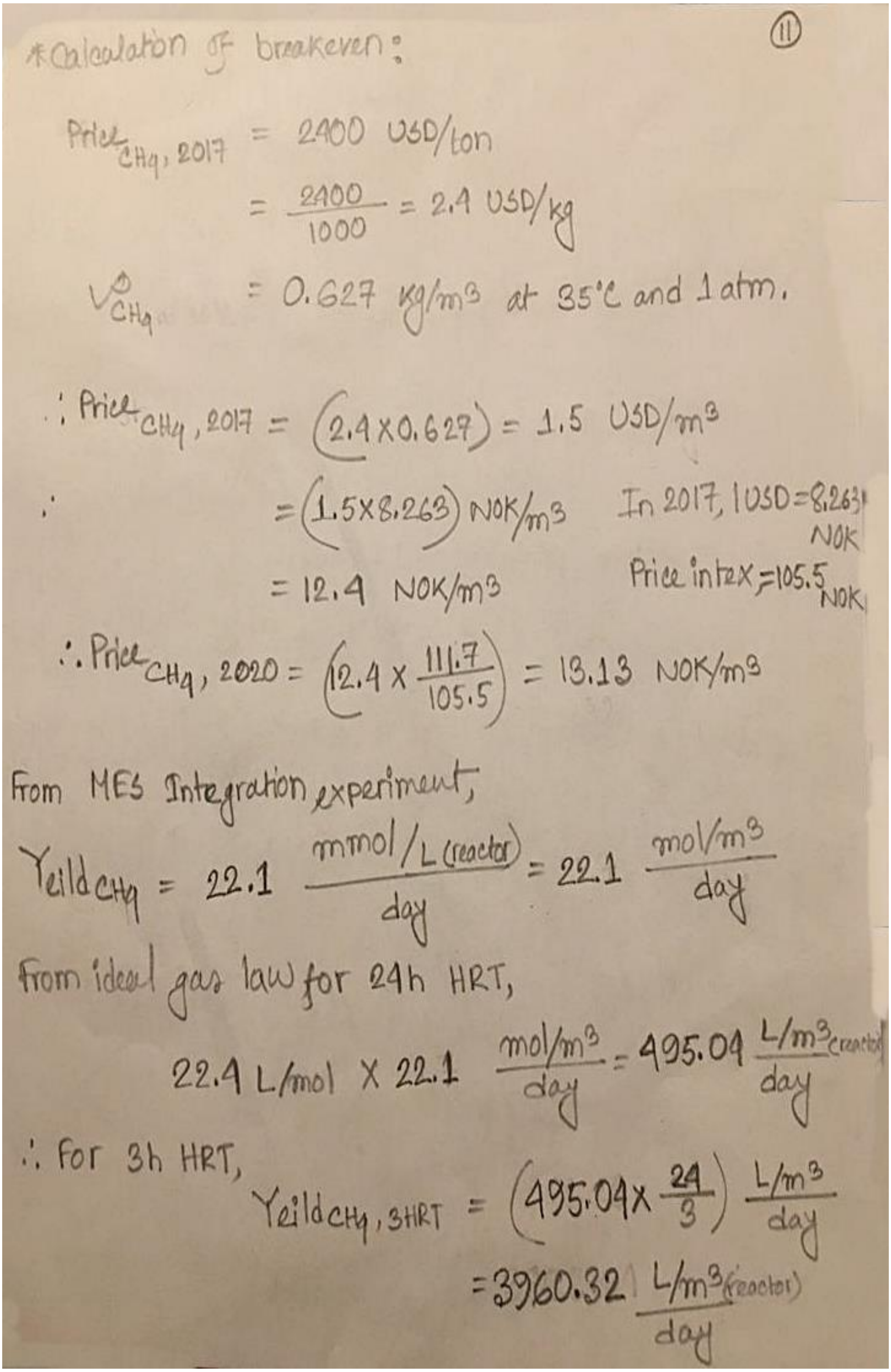

⑪

*Calculation of breakeven:

$\text{Price}_{CH_4,\,2017} = 2400$ USD/ton

$= \frac{2400}{1000} = 2.4$ USD/kg

$\rho_{CH_4} = 0.627$ kg/m³ at 35°C and 1 atm.

$\therefore \text{Price}_{CH_4,\,2017} = (2.4 \times 0.627) = 1.5$ USD/m³

$\therefore\ = (1.5 \times 8.263)$ NOK/m³ In 2017, 1USD = 8.263 NOK

$= 12.4$ NOK/m³ Price index = 105.5 NOK

$\therefore \text{Price}_{CH_4,\,2020} = \left(12.4 \times \frac{111.7}{105.5}\right) = 13.13$ NOK/m³

From MES Integration experiment,

$$\text{Yeild}_{CH_4} = 22.1\ \frac{\text{mmol}/\text{L (reactor)}}{\text{day}} = 22.1\ \frac{\text{mol}/\text{m}^3}{\text{day}}$$

From ideal gas law for 24h HRT,

$$22.4\ \text{L/mol} \times 22.1\ \frac{\text{mol}/\text{m}^3}{\text{day}} = 495.04\ \frac{\text{L}/\text{m}^3\text{(reactor)}}{\text{day}}$$

$\therefore$ For 3h HRT,

$$\text{Yeild}_{CH_4,\,3HRT} = \left(495.04 \times \frac{24}{3}\right) \frac{\text{L}/\text{m}^3}{\text{day}}$$

$$= 3960.32\ \frac{\text{L}/\text{m}^3\text{(reactor)}}{\text{day}}$$

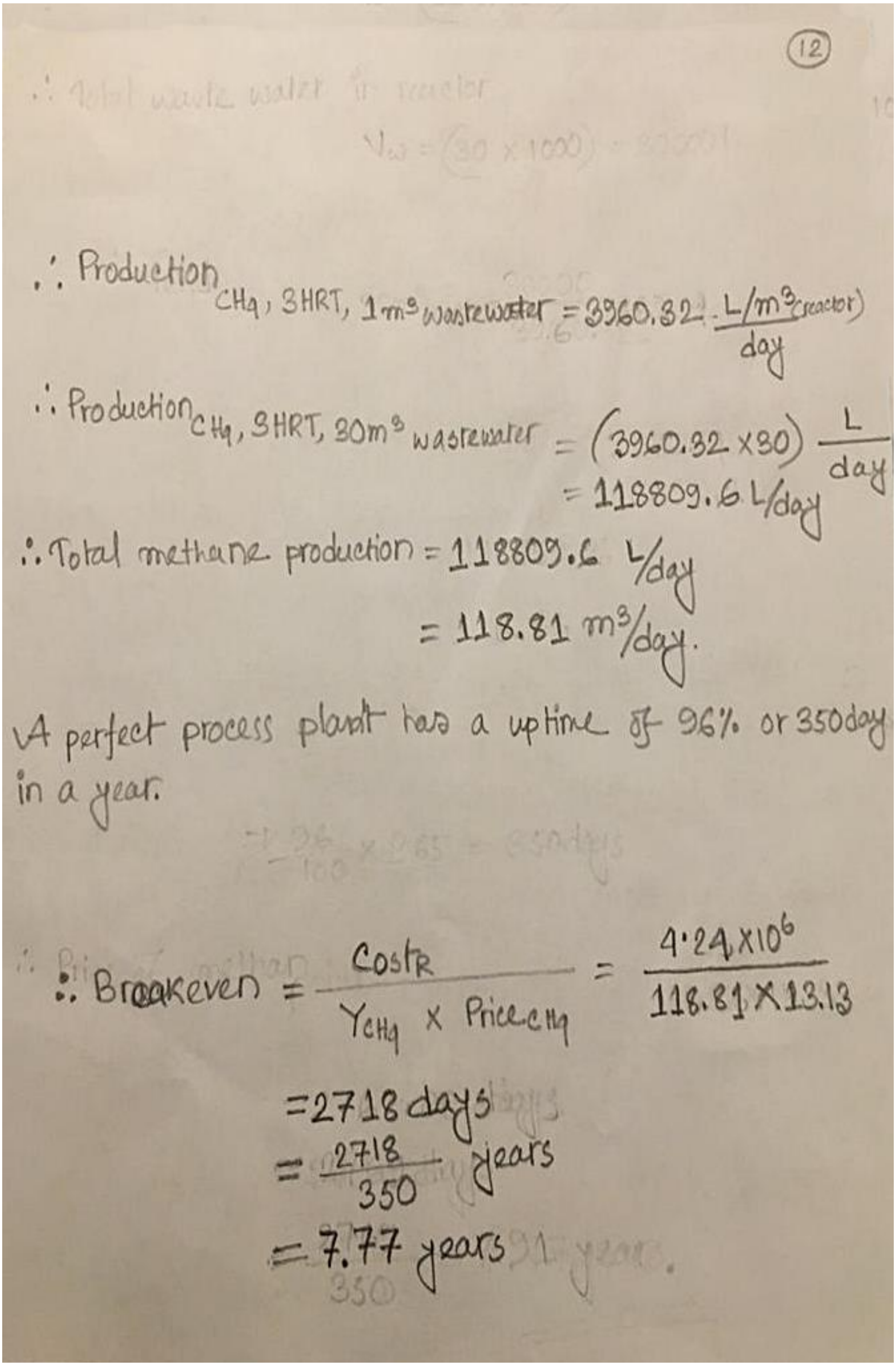

⑫

$$\therefore \text{Production}_{CH_4,\ 3HRT,\ 1m^3\ \text{wastewater}} = 3960.32\ \frac{L/m^3 (\text{reactor})}{\text{day}}$$

$$\therefore \text{Production}_{CH_4,\ 3HRT,\ 30m^3\ \text{wastewater}} = (3960.32 \times 30)\ \frac{L}{\text{day}}$$

$$= 118809.6\ L/\text{day}$$

$$\therefore \text{Total methane production} = 118809.6\ L/\text{day}$$

$$= 118.81\ m^3/\text{day}.$$

A perfect process plant has a uptime of 96% or 350 days in a year.

$$\therefore \text{Breakeven} = \frac{\text{Cost}_R}{Y_{CH_4} \times \text{Price}_{CH_4}} = \frac{4.24 \times 10^6}{118.81 \times 13.13}$$

$$= 2718\ \text{days}$$

$$= \frac{2718}{350}\ \text{years}$$

$$= 7.77\ \text{years}$$