Document Name:	Concept Study
Project Name:	Production Technology
Project Number:	2012-2
Course:	SFHO 03200 – H11 – Bachelor Thesis with project control
Availability:	3. year, Bachelor in Engineering at BUC – Buskerud University College
Supervisor:	Kjell Enger, BUC
Contracting Entity:	Kongsberg Protech Systems
Group:	
Halvor Eide, Ørjan Ohm, Sander K. Trandem, Knut Anders Lia and Alexander Svendsen	

Document History		
Rev.	**Changes**	**Date**
-		2012-03-11
1	Grammar and definition corrections.	2012-05-01
2	-Template update, -grammar corrections, -document title changed from “Production layout” to “Concept Study”, -Extract all chapters after chapter “Concept Conclusion”, to document “1001P Production Layout”	2012-05-22

(Intentionally Left Blank)

© BUC, Kongsberg, Production Technology

List of Contents

1 Introduction 5
1.1 Document Overview 6
1.2 Document Purpose 6
2 Production Layout Concepts 7
2.1 Concept 1, All in One 9
2.1.1 Case 1, Five per Week 10
2.1.2 Case 2, One per Week 12
2.1.3 Feedback from KPS 14
2.1.4 Improvements 14
2.1.5 Discussion 15
2.2 Concept 2, In Line 16
2.2.1 Case 1, Five per Week 16
2.2.2 Case 2, One per Week 18
2.2.3 Feedback from KPS 19
2.2.4 Improvements 20
2.2.5 Discussion 20
2.3 Concept 3, Half and Half 21
2.3.1 Case 1, Five per Week 21
2.3.2 Case 2, One per Week 23
2.3.3 Feedback from KPS 25
2.3.4 Discussion 26
2.4 Concept Conclusion 27
3 Abbreviations 28

© BUC, Kongsberg, Production Technology

List of Figures

Figure 1 - Document Relation 6
Figure 2 - Concept 1, Five per Week 9
Figure 3 - Concept 1, One per Week 12
Figure 4 - Concept 1, Five per Week - Improved 14
Figure 5 - Concept 2, Five per Week 16
Figure 6 - Concept 2, Five per Week - Improved 20
Figure 7 - Concept 3, Five per Week 21
Figure 8 - Concept 3, Five per Week - Improved 25
Figure 9 - Concept 3, One per Week - Improved 25

List of Tables

Table 1 - Assembly Stream 8
Table 2 - Flow of Testers HR 10
Table 3 - Concept 1, Five per Week 11
Table 4 - Concept 1, One per Week 13
Table 5 - Concept 2, Five per Week 17
Table 6 - Concept 2, One per Week 19
Table 7 - Concept 3, Five per Week 22
Table 8 - Concept 3, One per Week 24

© BUC, Kongsberg, Production Technology

1 Introduction

Production Technology is a Bachelor Thesis taken on by five mechanical engineering students from Buskerud University College in Kongsberg.

The Scope is limited to five study credits for the first semester (fall 2011), then 15 study credits for the second semester (spring 2012). This is estimated to 550 work hours per group member. There will be a higher priority on documentation then in a normal industry. This will give a better basis for evaluating the project.

The purpose of this project is to evaluate production models for Kongsberg Protech Systems (KPS). Kongsberg Protech Systems has developed a new product called Protector Medium Caliber that is going into production. To make the production effective they need to develop a specific production model that they can integrate in all their locations, and in different production scale.

The company has other similar products that are already in production. In the existing production there are used several Lean tools to make the production as efficient as possible. The difference between these products and the new one is the size and weight. The existing products are of smaller caliber and therefore smaller in size and easier to handle, than the new Protector Medium Caliber. Due to the size and weight of the product they need to develop a completely new assembly process. The production process is the backbone in the company and it is vital for the company to compete with others.

Our assignment is to make a main study that evaluates different production models and create concepts for the production of Protector Medium Caliber. The production is divided into two cases with different production rate, where Case 1 handles high rate production and Case 2 handles low rate production. For both cases, we will consider the need of cranes, lifts and other equipment to make the assembly as easy and effective as possible. In the production of Protector Medium Caliber there will be a need for a jig or a fixture to hold the product while assembling and testing. This jig will be designed in SolidWorks and integrated in our production model.

To be able to make a good analysis, we need to learn about production technologies and Lean manufacturing. By learning the basics of these subjects, we will ensure effective manufacturing of quality products and a safe and good environment for the workers. To accomplish this, two generic pre-studies will be produced as supporting literature. One study for production technologies and one study for Lean manufacturing. The two studies will be used as a support for arguments for the different choices and conclusions we make in our main study.

This Bachelor Thesis is a theoretical study and takes form of a written report with drawings and illustrations. The sources used are internet, personnel of KPS and literature in form of books. Project expenses are literature and printing of reports and poster.

© BUC, Kongsberg, Production Technology

1.1 Document Overview

This document is one of many reports in the Bachelor Thesis 2012-2.

The Figure below will give an overview and placement of the reports and documents for the Bachelor Thesis 2012-2. The textboxes represents documents and the green box is representing this document. The Appendix documents are not listed.

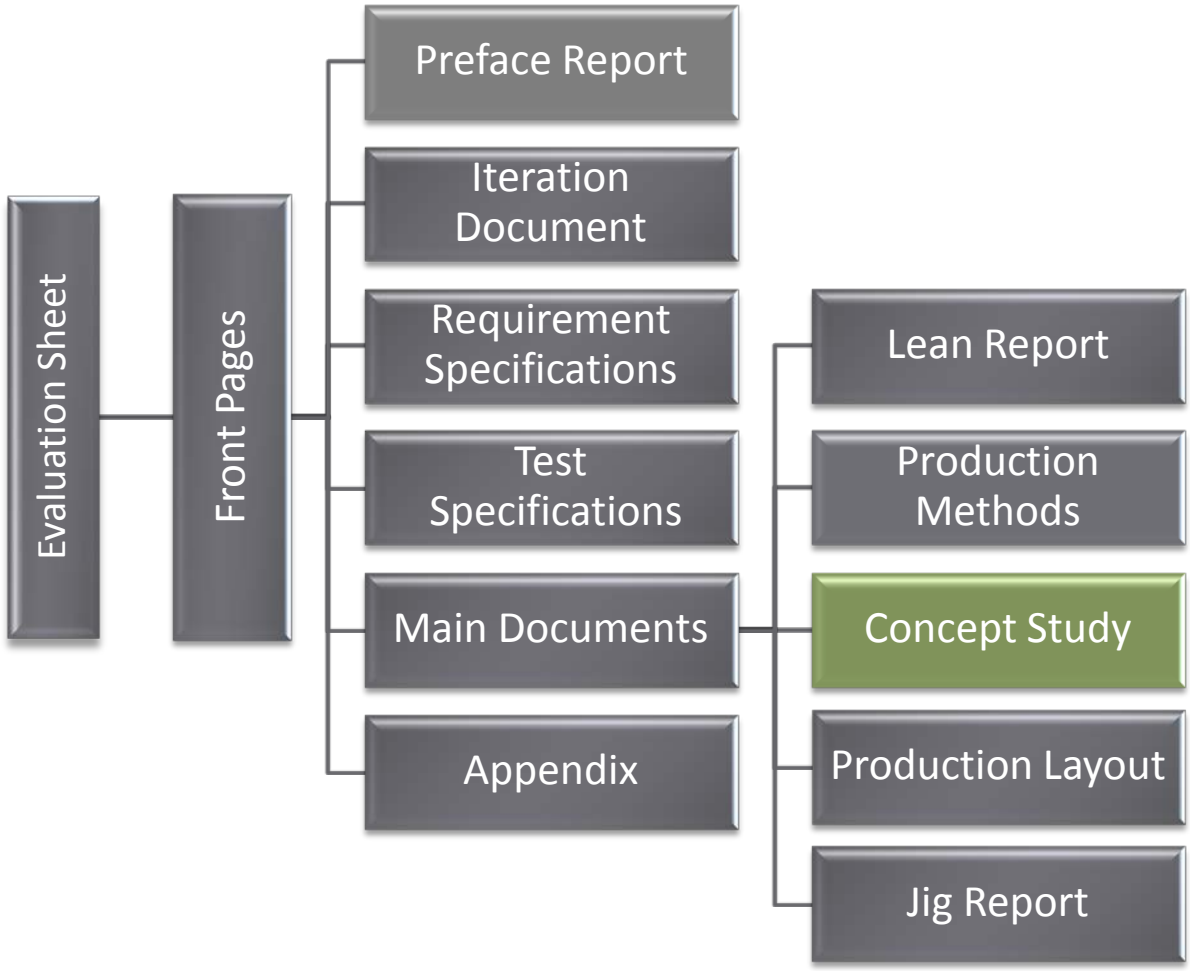

Figure 1 - Document Relation

1.2 Document Purpose

This document is a study on different production concepts for the production of Protector Medium Caliber. The concepts are developed with a basis from the Lean Report and Production Methods.

© BUC, Kongsberg, Production Technology

2 Production Layout Concepts

In this part of the assignment we started to look at different concepts for the production layout. We first started with a brainstorming and came up with a lot of different ideas for the production layout. These ideas were sketched on a standard scheme of the production hall, handed out from KPS. From these ideas, we have chosen three of the most different and interesting concept solutions. The reason for choosing three very different concepts solutions is to compare them against each other and find the pros and cons with each one. Then we can use the advantages from each concept to improve the chosen one.

We will choose one of the concepts for further development. As a requirement from KPS (requirement K03.01-02), the concept has to be able to adapt to different production scales such as producing one unit per week and five units per week. This means that the concept should be able to be adjusted in scale to achieve lower production rate. In relation with KPS we have created two cases for each concept, where we test them against the scaling adjustment ability. In case one, the production is five units per week and in case two the production is one unit per week. With these cases we will be able to find and conclude with a concept that satisfies the requirements.

KPS gave us a simplified list of the operations and time consumptions for all steps in the production. This list is shown in Table 1. The hours are based on an estimated time needed for the production step to be executed. Additional workers will lower the hour rate by the same amount of hours that they put into the production and packing, except for the testing part, which will have a total of sixteen hours anyway. There is 7.5 paid work hours per day; however KPS has stated that we use an effective work day of six hours (Requirement K03.19-20). This is because of coffee breaks, lunch breaks, unexpected (small) problems and etc. They also gave us a requirement for designing a production hall after the sizes of 900 m^2 and at least six meters under the ceiling (requirement K03.5-7). The final inspection is done by specialized personnel.

© BUC, Kongsberg, Production Technology

Table 1 - Assembly Stream

Assembly Stream		
No	**Elements**	**Time**
1	Main frame	2h
2	Weapon Elevation	3h
3	Elevation motor	2h
4	Cover support	2h
5	El. Box: Ethernet switch	4h
	El. Box: GIU box	
	El. Box: Battery box	
	El. Box: MSU 3x	
	El. Box: GCU box	
	El. Box: Charger unit 2x	
	El. Box: PDU	
	El. Box: HPDU & Coax cocking amp	
6	64 Cables	2h
7	Weapon & ammo box	2h
8	Sensor unit	1h
9	IHT (In house test)	6h
10	Protection cover	2h
11	FAT(factory acceptance test)	10h
12	Final inspection	2h
13	Packing	4h
		=42h

KPS gave us a drawing of an existing production area located in Kongsberg. This drawing will be the basis limit for our layout development. The drawing will only be a reference to a likely production area as the production will not take place in Kongsberg. KPS has stated that these facts are not relevant for our project. The layout concept sketches will include limited areas for the RWS to turn safely for testing, areas for the assembly and the parts under assembling. The area will also have marked areas for delivering of part by trucks and cranes. For the different limited production areas in the facility, we will use different definitions. In the following words: cell, post, station and work station all refers to a limited specific area. The different concepts may have different containment in each cell. This is described in the introduction for each concept.

© BUC, Kongsberg, Production Technology

2.1 Concept 1, All in One

In this concept we will have one type of production cell where all jigs are all equal and stationary. The cells are placed along the wall of the production area as shown in Figure 2. The main idea for this concept is to move the product as little as possible ("Seven wastes", chapter 6.0, Lean Report). This is solved by letting the whole production, with assembling, testing and packing, be done at the same spot. The concept will need personnel that are trained in all parts of the production and a complete set of tools at each station. Referring to our Production Methods report, this is a "job shop". In a job shop, flexible resources are used to produce low volumes of highly customized and varied products. Figure 2 shows a layout of the concept with a production of 5 units' per week. Each numbered circle represent a production cell where each has a respectively area of delivering depot for parts.

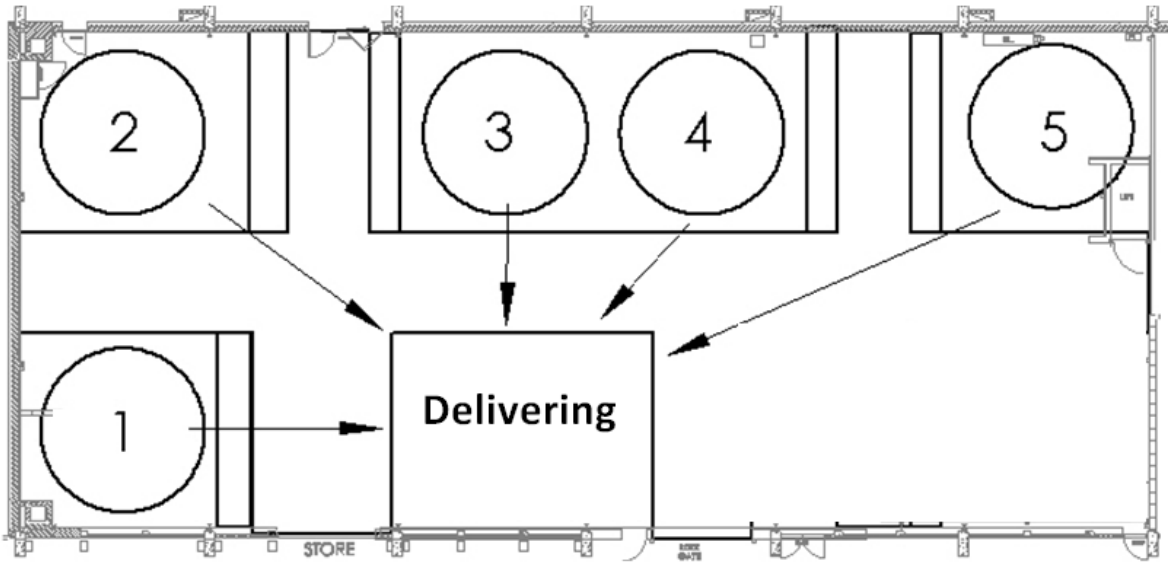

Figure 2 - Concept 1, Five per Week

Jigs

This concept requires five standard jigs that satisfy all requirements for both assembling and testing. Since the whole production is stationary for each unit, the jig doesn't need wheels or rails, but can be bolted to the floor. The jig will require the ability to be lowered and elevated, so workers gets access from all angles to the product. Another requirement would be that the jig could withstand the rotating forces during test procedures.

© BUC, Kongsberg, Production Technology

2.1.1 Case 1, Five per Week

It takes forty-two hours to completely build, test and pack a single product. We assume that a workday includes six hours of effective work. This means that it will take seven days to complete one product for one person. To be able to produce five products in one week, there is a need of seven stations, which will result in one finished product each day. This will require personnel who individual can manage all types of work operations. With education costs in mind, this is not a good solution. We have therefore reduced the number of stations by two. The case represents now five stations where three workers assemble one unit, in one day.

Time and work

Table 3, on the next page, shows how this concept is executed with the case of five units produced per week. The diagram shows the work-flow with three operators assembling the whole product the first day. They will finish after one day of 18 effective hours and next day, they start a new unit. They will then have the same routine every day and always producing one unit each day. After the product is assembled, one test personnel does the rest of the process within four days. The tester will also pack the product after the final FAT. The concept has five cells to produce one unit each day. One day for assembling and four days for the rest. The units will be stand still, with the workers moving from cell to cell. As we can see from Table 2, below, we need a total of four testers who can execute all the tests to produce one unit each day. The table shows seven days of work with a startup of a new unit each day.

Table 2 - Flow of Testers HR

	Day 1	Day 2	Day 3	Day 4	Day 5	Day 6	Day 7
Unit 1	Assembly	Tester 1	Tester 1	Tester 1	Tester 1		
Unit 2		Assembly	Tester 2	Tester 2	Tester 2	Tester 2	
Unit 3			Assembly	Tester 3	Tester 3	Tester 3	Tester 3
Unit 4				Assembly	Tester 4	Tester 4	Tester 4
Unit 5					Assembly	Tester 1	Tester 1

The final inspection is done by a special inspector and not those working in the production area. This is marked in red in Table 3, on next page. Those two hours is spare time for the tester, and should be filled with inspection of tools, HSE and general cleanliness in the production area.

A total of three workers assemble for six hours, five days per week, with a total of 90 effective work hours per week. Four testers will test six hours, five days per week with a total of 120 effective work hours per week. The final inspection of two hours is done by the inspector at the end of each day. We will therefore have a total of 220 effective hours for the production, plus the inspector each week. This will add up to seven workers and testers, plus the inspector.

© BUC, Kongsberg, Production Technology

Table 3 - Concept 1, Five per Week

No	Process	Day 1	Day 2	Day 3	Day 4	Day 5
1	Main frame	3w * 0.67h				
2	Weapon elevation	3w * 1h				
3	Elevation motor	3w * 0.67h				
4	Cover support	3w * 0.67h				
5	El. boxes	3w * 1.34h				
6	Cables	3w * 0.67h				
7	Weapon and ammunition	3w * 0.67h				
8	Sensor unit	3w * 0.34h				
9	IHT		1w * 6h			
10	Protection cover			1w * 2h		
11	FAT			1w * 4h	1w * 6h	
12	Final Inspection					1w * 2h
13	Packing					1w * 4h

Advantages

- The whole production does not stop if there is a problem at one of the stations.
- The product is not moved during the production.
- One type of production jig for all stations.
- Production can be scaled down by excluding one or more production stations.

Disadvantages

- High investment cost.
- All equipment placed in one cell might lead to disorderliness.
- All stations need a set of equal tools.
- No spare station if down-time, production at one station will stop completely.
- Vast amount of production jigs.
- Unused equipment when scaling down production.
- Lack of area for separate packing and shipping crate.

© BUC, Kongsberg, Production Technology

2.1.2 Case 2, One per Week

It takes 42 hours to completely build, test and pack a single product. We assume that a workday includes six hours of effective work. This means that it will take seven days to complete one product, for one person. To be able to produce one product per week with only one station we need to have extra part time workers.

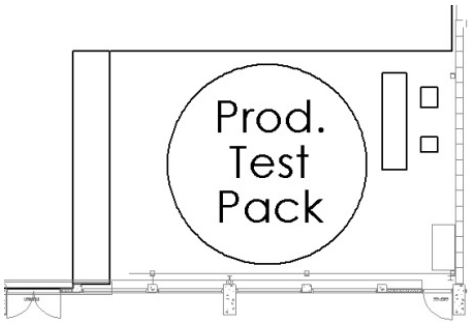

Figure 3 - Concept 1, One per Week

Time and work

Table 4 below shows how this concept will be executed with the case of one unit produced per week. The first day of each week consists of two workers, assembling the first twelve hours of the product. The next day one of the worker continues with the manufacturing alone. The third day, the unit is ready for testing. The tests will continue until the last day of the week. The final inspection shall take place before the product is packed and is done by an external person. To accomplish this, the tester should start a little earlier on the last day, so the inspector can inspect the product for two hours, at the end of his/hers. The last part, packing, can be done by an evening worker or two as it might be wise to have two workers at the evening due to HSE (safety). This will also reduce the amount of effective hours from four till two hours. The work of the inspector is marked in red in the table. The work of the evening workers is marked in blue in the table.

The disadvantage with this solution is to not have work for all workers after the first day. In a large production company, it should be possible to find other work tasks, but in a smaller company it could be difficult. Since it is a full day job, every first day of a new unit, it might be possible to hire a part-time worker. Another problem which can occur, is time delay for the worker the second day due to handling of the last part of production alone. It should therefore be possible to get help from extern workers at predefined parts of the production this day.

This concept solution will demand one worker with expertise in both manufacturing and testing. It will also demand an additional part-time worker for manufacturing a full-day every first day, an inspector and one or two evening workers. This will add up to forty-two effective hours per week.

There will be a separate shipping crate, so the packing can be handled easier. It might be difficult to wrap the bottom of the product, and it’s likely that it must be moved to a shipping unit.

Table 4 below, shows the production of one unit in five days. The number and w, describes amount of workers and h, stands for hours. The product of this is the amount of production

© BUC, Kongsberg, Production Technology

time. The colored text in the table indicates that these operations will be done by evening workers.

Table 4 - Concept 1, One per Week

No	Process	Day 1	Day 2	Day 3	Day 4	Day 5
1	Main frame	2w * 1h				
2	Weapon elevation	2w * 1.5h				
3	Elevation motor	2w * 1h				
4	Cover support	2w * 1h				
5	El. boxes	2w * 1.5h	1w * 1h			
6	Cables		1w * 2h			
7	Weapon and ammunition		1w * 2h			
8	Sensor unit		1w * 1h			
9	IHT			1w * 6h		
10	Protection cover				1w * 2h	
11	FAT				1w * 4h	1w * 6h
12	Final Inspection					1w * 2h
13	Packing					1w * 4h

Advantages

- The product is not moved during the production.
- Requires a simple jig that only needs to be elevated.
- The same production jig for all operations.

Disadvantages

- Worker being out of work, at several times through the production.
- No spare cells, if production stops.
- All equipment placed in one cell might lead to disorderliness.
- The whole work flow relies on one operator's time schedule, and one production cell.
- Difficult to find a good solution for the extra worker the first day.
- There might be a need of two workers in the assembly part the second day, at least at some part of the production this day.

© BUC, Kongsberg, Production Technology

2.1.3 Feedback from KPS

This setup will produce one product per day, five days a week or one unit per week. If something goes wrong with one of the station, it won't affect the others. But if one station fails, the requirement of producing five units per week fails, and there is nothing we can do to catch up. As mentioned earlier (case 2), it is easier to find a solution for this in the case of one per week if we have an additional cell. There shall also be a backup cell in case 1.

For case 2 the worker in this assembly concept has to have the knowledge about the whole product. Usually in an assembly there are people that build the product and there are people that test it. The builder only have to know what part comes next, but the testers might need some more knowledge about the product to be able to troubleshoot it. Because of this it might be wise to separate the production from the testing, as of case 1.

2.1.4 Improvements

If something goes wrong at one of the stations, we will have an extra work station as backup. In this way we can move the product to this station if the jig fails, or start to build a new unit, if it is the product there is something wrong with. In this way we can still manage to deliver five units per week.

Since there should be separate people conducting the tests, they will cycle between the different work stations for case 1. This can be solved with either having test equipment at all the stations or movable testing equipment that the personnel can take with them to the station they are testing. For case 2, it will be expensive to have separated personnel for assembling/testing as the worker has no other work areas the other days.

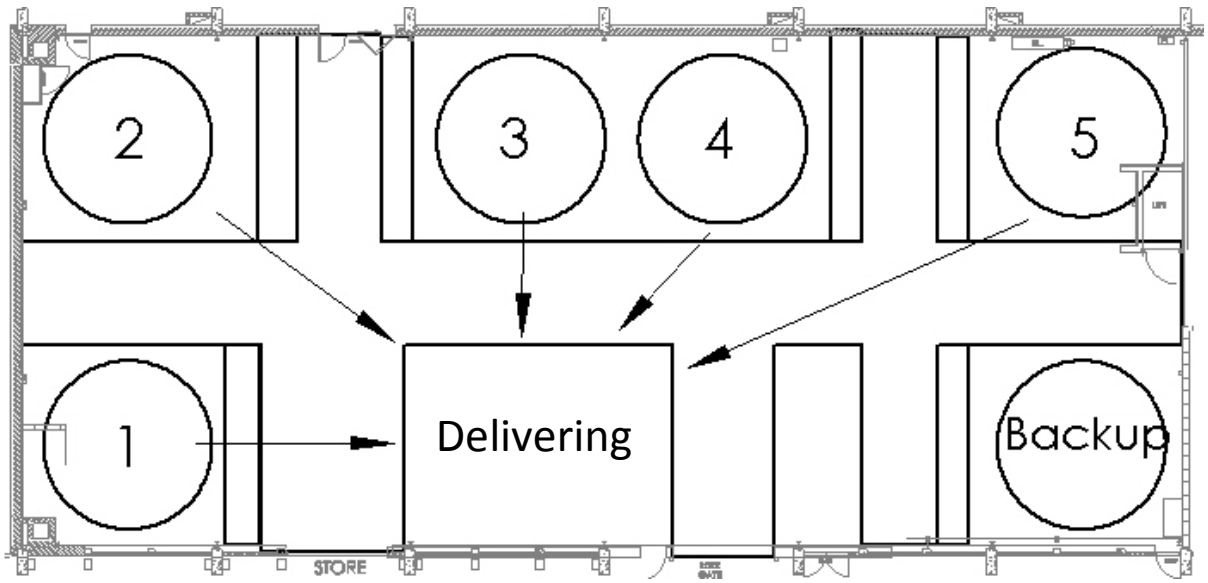

Figure 4 - Concept 1, Five per Week - Improved

2.1.5 Discussion

The main advantages with this concept is the need of a simple jig, no need for moving during production and that the whole production doesn't stop if there's a problem at one station like an in line production would do. But these advantages can be easily achieved by other solutions. One example is to split up the assembly and tests.

On the other hand, there are a lot of disadvantages with this concept. For case 2, there are difficulties with the work-flow. For case 2 we need personnel that can handle all the tasks, as the whole production relies on this worker. It will also need a worker, only participating one day each week and an external packer. For both cases there will be needed a lot of tools at all stations. This can be expensive but most important of all, lead to untidiness and disorder. The packer should also have a separate packing fixture for the packing and delivering.

© BUC, Kongsberg, Production Technology

2.2 Concept 2, In Line

This concept is based on the traditional assembly line. By using a in line production, the product will be moved on portable jigs, from post to post. The main idea of an assembly line production is to have multiple working stations and specially trained workers at each station. This will decrease the total time spent to assemble the product and the amount of equipment. This concept is called flow shop, referred to the Production Methods report. Flow shops or mass production, uses more specialized resources to perform limited tasks with high precision and speed. Figure 5 shows the concept for the case of five produced units per week.

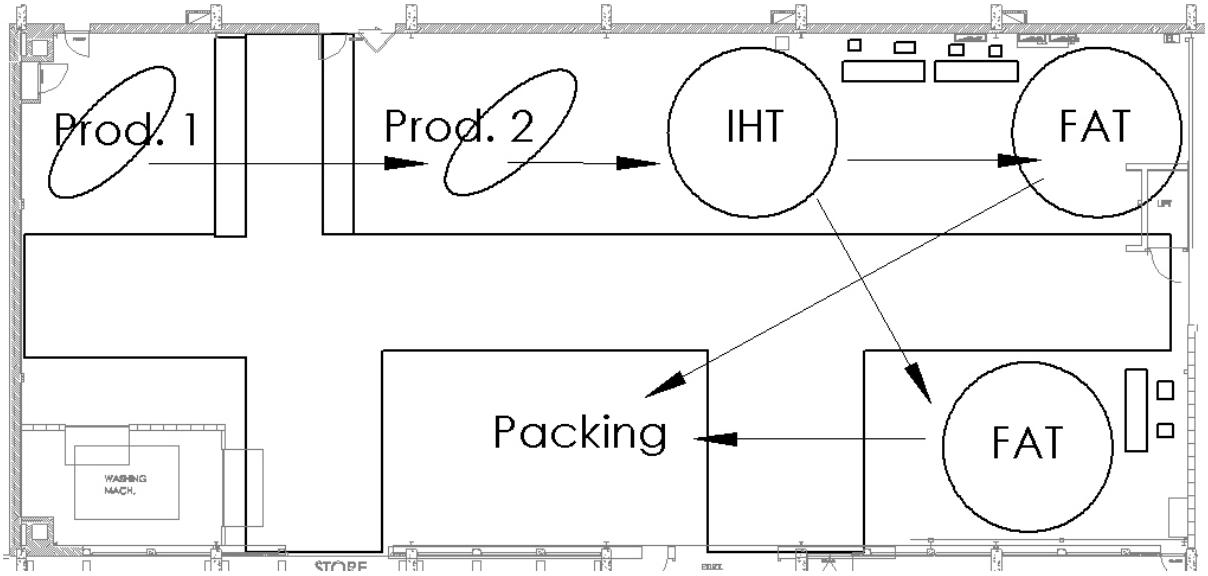

Figure 5 - Concept 2, Five per Week

Jigs

The concept has five jigs that are moveable and moves in cycles to always make the production in progress. This applies for both case 1 and case 2. The jigs needs to have the function of wheels or rails to make them moveable. When a product is finished and removed from the jig, the jig is guided back to the first post. A requirement is that the jig has to be able to be lowered and elevated for easy access to the unit. A combination of moveable jig and this will make the jigs complex and expensive. There is also a need of a packing fixture for further transport.

2.2.1 Case 1, Five per Week

Time and work

It takes forty-two hours to completely build, test and pack a single product. We assume that a workday includes six hours of effective work. This means that it will take seven days to complete one product for one person. The production process will be split up, so the product will stay on a station for one day before it will be moved on to the next. This will result in three workers for assembly and three workers for testing. Table 5 below, shows the production of one unit in five days. The number and w, describes amount of workers and h, stands for hours. The product of this is the amount of production time. A specialist marked in red in Table 5, works for two hours with the final inspection, and a part time employee works for four hours with packing.

© BUC, Kongsberg, Production Technology

Table 5 - Concept 2, Five per Week

Process	Prod. 1	Prod. 2	Test 1	Test 2/3	Packing
Main frame	2w * 1h				
Weapon elevation	2w*1.5h				
Elevation motor	2w * 1h				
Cover support	2w * 1h				
El. boxes	2w * 2h				
Cables		1w * 2h			
Weapon and ammunition		1w * 2h			
Sensor unit		1w* 1h			
IHT			1w * 6h		
Protection cover				1w * 2h	
FAT				1w *10h	
Final Inspection					1w * 2h
Packing					1w * 4h

From Table 5, we can see that in one station the workers will work for 6.5 hours, but in another they will work for only five hours. This is not optimal, but the product cannot be move right in the middle of an operation. You have to finish it on one station, before you can move it to the next. The operations, on one station, have to be finished that day, because the workers on the next station will keep working on it the day after. We need two jigs in the fifth station to manage FAT testing. This means that the product will use six days from start to end, which also means that the work flow will be divided in cycles of six days. In the last station there will be a specialist that works for two hours. He is not a part of the production crew but we need to make room for him in the production. The last part of the process is the packing for four hours. This can either be done by one or two evening workers or managed the sixth day by storage workers.

The total need of manpower is three workers for manufacturing, three test persons, one inspector and one packer. The total effective work hours per week will be 210 hours.

© BUC, Kongsberg, Production Technology

Advantages

- The workers can be trained specially for their working station.
- Separate packing fixture.

Disadvantages

- The production will stop if there is a problem in the assembly line.
- If a product is moved out of the assembly line for troubleshooting, it will be hard to get it back in the assembly line.
- There is a need for a system to move the product between work stations.
- The product has to be moved several times.
- Complex and expensive jigs.
- There might be a need for two people at some stations to install heavy parts.

2.2.2 Case 2, One per Week

In this case we are going to produce one product each week and we will have six stations, the product has to stay on each station for a whole week.

1. **Main:**
   One worker will mount the main frame, weapon elevation, elevation motor and the first part of ballistic protection cover support. This process takes seven hours and it will be waiting for twenty-three hours before it is moved.
2. **Ballistic protection and El. Boxes:**
   One worker will mount the rest of ballistic protection cover supports and the electrical boxes. This will take six hours and it will be waiting for twenty-four hours before it is moved.
3. **El. Boxes, cables and weapon:**
   One worker will mount the rest of the electrical boxes, all cables, weapons, ammo box and aiming equipment. This process takes five hours and it will be waiting for twenty-five hours before it is moved.
4. **IHT:**
   One worker will perform the In House Test, to make sure the components work together. This process takes six hours and it will be waiting for twenty-four hours before it is moved.
5. **Cover + FAT:**
   One worker will mount cover and perform Factory Acceptance Test to make sure the product is ready to be delivered to customer. In this case we only need one jig on this station. This process takes twelve hours and it will be waiting for eighteen hours before it is moved.
6. **Final inspection and Packing:**
   The final inspection has to be executed by specialists, this takes two hour and the packing will take four hours and it will be waiting for twenty-four hours before it is moved.

© BUC, Kongsberg, Production Technology

Table 6 below, shows the production of one unit in five days. The number and w, describes amount of workers and h, stands for hours. The product of this is the amount of production time. The work hours for the inspector are marked in red.

Table 6 - Concept 2, One per Week

Process	Prod. 1	Prod. 2	Test 1	Test 2/3	Packing
Main frame	1w * 2h				
Weapon elevation	1w * 3h				
Elevation motor	1w * 2h				
Cover support	1w * 2h				
El. boxes	1w * 3h	1w * 1h			
Cables		1w * 2h			
Weapon and ammunition		1w * 2h			
Sensor unit		1w * 1h			
IHT		1w * 6h			
Protection cover			1w * 2h		
FAT			1w * 10h		
Final Inspection					1w * 2h
Packing					1w * 4h

As we can see, this layout is not very suited for producing low quantities. Most of the time, the product will be standing still on one station and wait to be moved to the next ("Flow efficiency", chapter 8, Lean Report). The only logical solution to this is to merge some of the stations. This means that we will do additional tasks on every station and minimize the number of stations. We will in fact, end up with only one jig and a concept that is identical to the first we have developed. This tells us that this concept is not suited for producing only one product per week.

2.2.3 Feedback from KPS

This setup will produce one product per day, five days a week but if something goes wrong with one of the station, it will affect the others. If one station fails the rest of the stations will, at some point stop producing.

All the workers in this assembly line do not necessarily have the same amount of knowledge of all the components. It is common to divide the production into fields where the workers has specified skills required to perform specific tasks. So each post has its own specialized team.

Another problem with this concept was that the heavy weight of the product would make it very hard to move the jig on wheels. To be able to do this, the jig has to be very complicate and exposed for high stresses. Such a jig would be more expensive and therefore, it might be more economical to move the product with a crane.

© BUC, Kongsberg, Production Technology

2.2.4 Improvements

If something goes wrong at one of the stations, we will have a backup station for troubleshooting. This will not be a part of the assembly line, but an isolated area where the troubleshooting can be executed, without interrupting the rest of the production. In this way we can still manage to deliver five units per week or one unit per week.

Since the heavy weight of the product makes it very hard to move the jig, we will use cranes to move the product between the jigs. Figure 6 shows the improved concept for the case of producing five units per week.

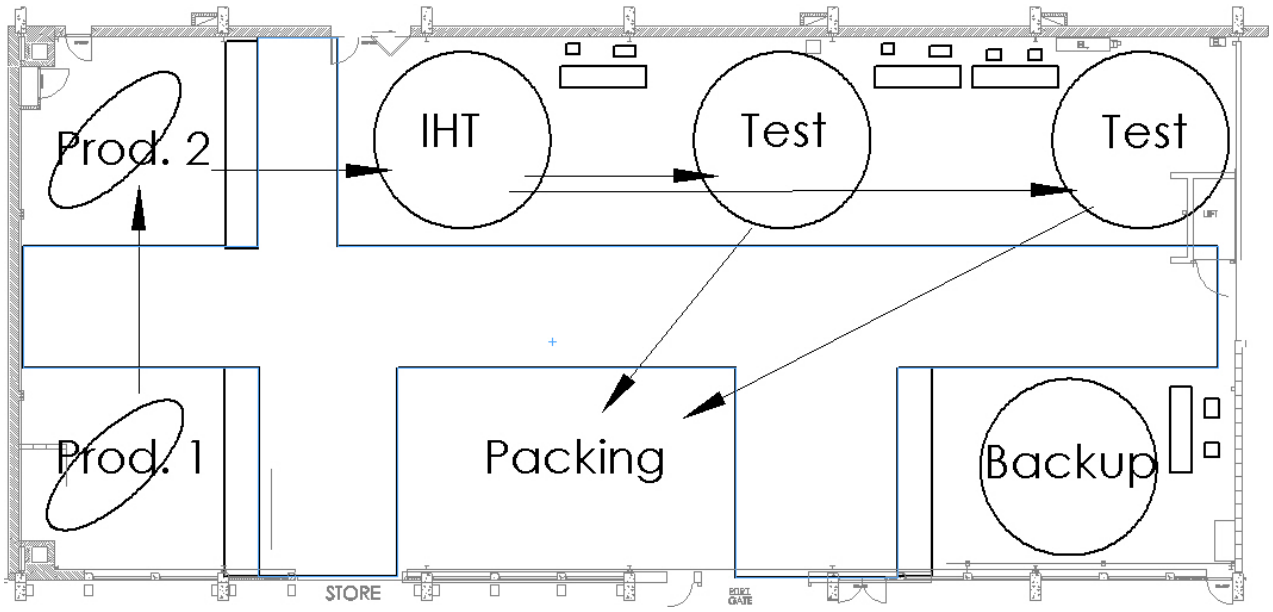

Figure 6 - Concept 2, Five per Week - Improved

2.2.5 Discussion

The main advantages with this concept are that every worker can be specialized in one part of the assembly. This can be a good solution for producing five units per week, but it has some disadvantages as well.

On the downside the product has to move a lot and this has to be done by crane, which requires much logistics and it takes a lot of time (“Seven wastes”, chapter 6.0, Lean Report). And if anything goes wrong, the whole production stops. It would be impossible to get the product back into the assembly line, if it is taken out for troubleshooting.

This concept is also impossible to scale down to produce only one unit per week, because of the unnecessary waiting in each station.

© BUC, Kongsberg, Production Technology

2.3 Concept 3, Half and Half

This concept is a combination of “All in one” and “In Line”. The production and testing will be divided and executed on two separate jigs. The advantage with this is that we don’t need to move the product a lot (“Seven wastes”, chapter 6.0, Lean Report), but it still allows us to use specialist for testing and regular workers for the assembly. Referring to our Production Methods report we can say that this is a kind of batch production. Batch production is a mix of job shops and flow shops, where process and product planning is done for each batch or order. Figure 7 shows the concept for the case of five produced units per week

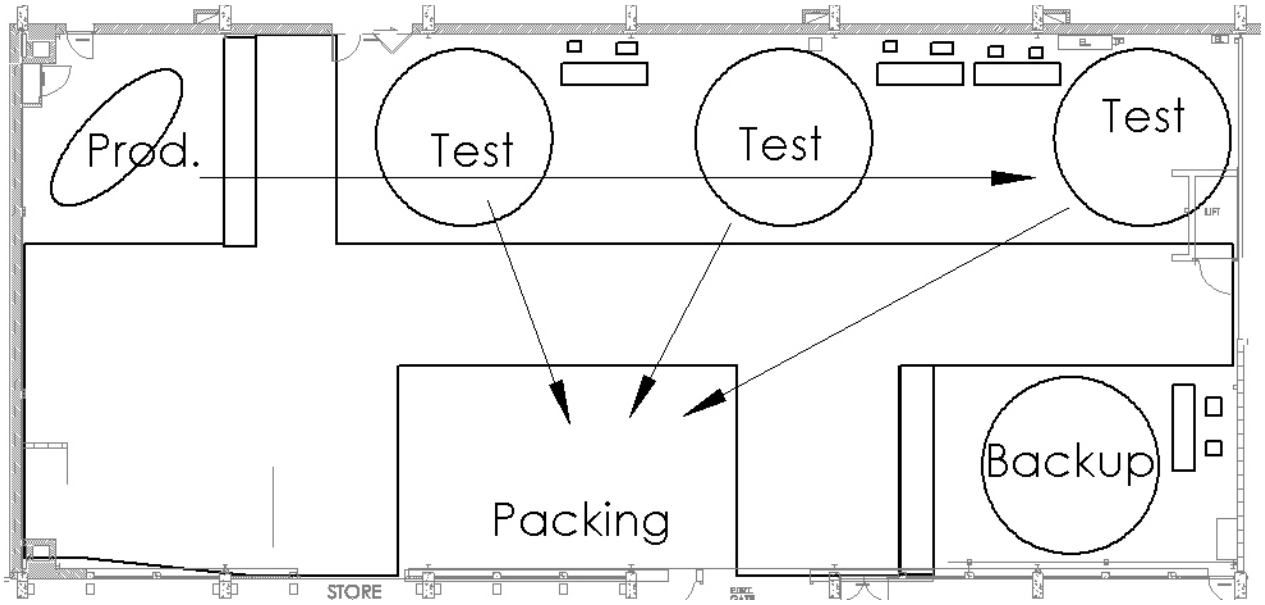

Figure 7 - Concept 3, Five per Week

Jigs

In this concept we need four separate assembly jigs and test jigs that are bolted to the ground. The only requirement is that it should be able to be elevated from the floor, so the workers have the opportunity to work beneath the product and don’t have to climb on a ladder when working from the top. There will also be a separate packing area/packing fixture and a backup jig.

2.3.1 Case 1, Five per Week

Time and work

It takes forty-two hours to completely build, test and pack a single product. We assume that a workday includes six hours of effective work. This means that it will take seven days to complete one product for one person. By working only daytime, Monday to Friday, one possibility is to have one assembly jig, and three tests jigs. By having three workers to execute the assembly on each jig, this part can be done in one day, or six effective hours. When a product is assembled and moved to the test station, the workers will start up with a new assembly. When the IHT and FAT is ready, the product is moved to a packing area where a quality controller will have a final inspection of the product before it is packed. The tests take three days. Inspection and packing take one day, and will be done parallel to the assembly and

© BUC, Kongsberg, Production Technology

tests of other units. This will result in producing one product per day. There is also a need for one backup jig, in case of failure.

Table 7 below, shows the production of one unit in five days. The number and w, describes amount of workers and h, stands for hours. The product of this is the amount of production time. The grey text highlight color in the table indicates that these operations will be done parallel with the assembly and not interrupt in any way.

Table 7 - Concept 3, Five per Week

No.	Process	Day 1	Day 2	Day 3	Day 4	Day 5
1	Main frame	3w * 0,67h				
2	Weapon elevation	3w * 1h				
3	Elevation motor	3w * 0,67h				
4	Cover support	3w * 0,67h				
5	El. boxes	3w * 1,33h				
6	Cables	3w * 0,67h				
7	Weapon and ammunition	3w * 0,67h				
8	Sensor unit	3w * 0,33h				
9	IHT		1w * 6h			
10	Protection cover			1w * 2h		
11	FAT			1w * 4h	1w * 6h	
12	Final inspection					1w * 2h
13	Packing					1w * 4h

The inspection and packing will be done on a specified place. The inspector will only work two effective hours per day, and the person that execute the packing will have other responsibilities such as controlling and cleaning of tools etc. The total need of manpower is seven workers plus the inspector. The total work hours per week are 220 hours.

Advantages

- Different jigs for each cell.
- Down-time does not stop the whole production.
- Don’t need to move the product much before packaging.
- Requires a simple jig that only needs to be elevated.
- Separate packing fixture.
- Production can be scaled down by leaving some cells unused.

Disadvantages

© BUC, Kongsberg, Production Technology

- The product needs to be lifted from one jig to another.
- Scaled down production results in unused equipment.

2.3.2 Case 2, One per Week

It takes forty-two hours to completely build, test and pack a single product. We assume that a workday includes six hours of effective work. This means that it will take seven days to complete one product for one person. Since the production takes forty-two hours, and there are thirty effective work hours a week, there is a need to compress the production to satisfy the requirement of producing one product per week.

By working only daytime, there is a need for one production jig, one test jig, one backup jig and one packing fixture. To compress the production to satisfy the requirement of producing one product per week, it will be a need of two workers to do the assembly. The assembly can be done in 1.5 days. This means that the product will be moved on to the test jig, tested and inspected the last 3.5 days of the week. The packing is done in the evening, the last day, after the final inspection is done.

Table 8 shows how this concept is executed with the case of one unit produced per week. The first day of each week consist of two workers assembling the first twelve hours of the product. The next day one of the workers continues with the manufacturing alone. The third day, the unit is assembled and ready to be tested. The tests will continue until the last day of the week. The final inspection shall take place before the product is packed and is done by an external person. To accomplish this, the tester should start a little earlier on Fridays, so the inspector can inspect the product at the end of his/hers day (two hours). The last part, packing, can be done by an evening worker since this part of the production doesn't need any special skills or certificates. This will be done on a separate area in special packing crates. On the other hand, it might be a requirement to have two workers at the evening due to safety ("6S", chapter 6.2, Lean Report). This will also reduce the effective hours from four till two hours. The work of the inspector is marked in red in the table. The work of the evening workers is marked in blue in the table.

The disadvantage with this solution is to find work for the other worker the other days (all other than Monday). In a big production facility, this should be possible, but in a smaller facility it could be difficult. Since it is a full day job, every Monday it might be possible to hire a part-time worker.
Another problem which can occur is time delay for the worker the second day due to handling of the last part of production alone (heavy lifting etc.). It should therefore be possible to get help from store workers at some predefined parts of the production this day.

© BUC, Kongsberg, Production Technology

Table 8 shows the production of one unit in five days. The number and w, describes amount of workers and h, stands for hours. The product of this is the amount of production

Table 8 - Concept 3, One per Week

No	Process	Day 1	Day 2	Day 3	Day 4	Day 5
1	Main frame	2w * 1h				
2	Weapon elevation	2w * 1.5h				
3	Elevation motor	2w * 1h				
4	Cover support	2w * 1h				
5	El. boxes	2w * 1.5h	1w * 1h			
6	Cables		1w * 2h			
7	Weapon and ammunition		1w * 2h			
8	Sensor unit		1w * 1h			
9	IHT			1w * 6h		
10	Protection cover				1w * 2h	
11	FAT				1w * 4h	1w * 6h
12	Final Inspection					1w * 2h
13	Packing					1w * 4h

This solution will demand one worker with expertise in both manufacturing and testing, it will also demand an additional part-time worker for manufacturing a full-day every Monday, an inspector and one or two evening workers for packing. This will add up to 42 effective hours per week.

Advantages

- Different jigs for each cell.
- Down-time does not stop the whole production.
- No need to move the product far before packing.
- Requires a simple jig that only needs to be elevated.
- Production can be scaled down by leaving cells unused.

Disadvantages

- The product needs to be lifted from one jig to another.
- The whole work flow relies on one operator's time schedule.
- Difficult to find a good solution for the extra worker (on Mondays).
- There might be a need of two workers in the assembly part the second day, at least at some part of the production this day.

© BUC, Kongsberg, Production Technology

2.3.3 Feedback from KPS

Since we had thought of having a backup jig, the feedback was only positive. By separating the assembly and tests to its own stations, it won't be necessary to move the product a lot ("Seven wastes", chapter 6.0, Lean Report) and if the tests fail it won't affect the assembling. It is also wise to separate these processes because of the knowledge of the workers.

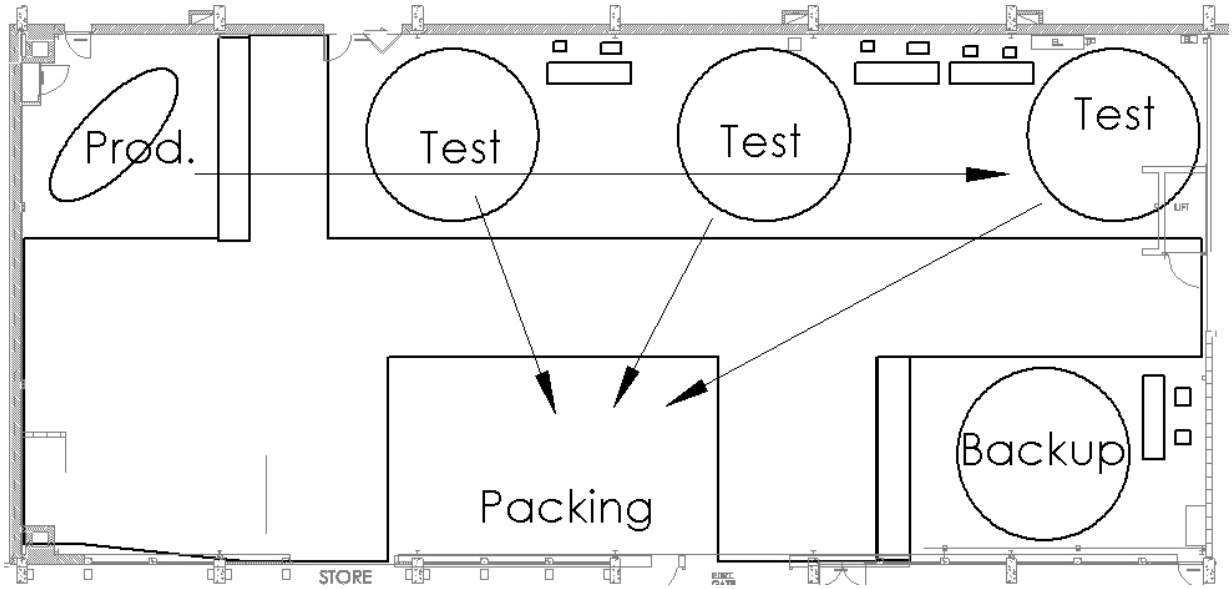

Figure 8 - Concept 3, Five per Week - Improved

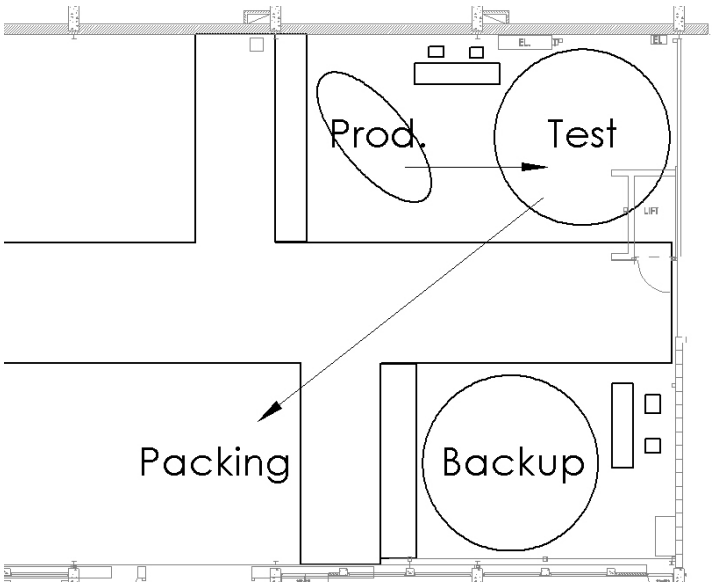

Figure 9 - Concept 3, One per Week - Improved

© BUC, Kongsberg, Production Technology

2.3.4 Discussion

Concept 3 does not require moving the product a lot but it has still divided the assembling from the testing. The advantage with this is that, if something goes wrong during the tests, it will not affect the assembling. It will also allow the workers to move the product out of the way, so they can start on a new product, which reduces the down-time. It will also separate the test from the assembly, and the packing as well. All these areas will have their set of tools and equipment. The jigs at these places will also be different e.g. the packing fixture will be a lot simpler than the assembly jig. This means that all jigs can be more specialized to the respective work station. This allows us to construct one assembly jig, one test jig, one packing jig and one backup jig with specialized functions. This will not be the case with neither of the other concepts. The concept also contains a backup jig which makes the concept resistant to failures and makes the production reliable.

On the other side, the product needs to be lifted some. It needs to be lifted from the assembly jig to the test jig and at the end to the packing fixture. It is still less movement than concept 2, and should cover a good solution for the logistics of the crane. As of case 2 there is the same disadvantage with only one worker for assembly one of the days. This person will only work one day a week and will have all the responsibility to assemble the whole product.

© BUC, Kongsberg, Production Technology

2.4 Concept Conclusion

This chapter will result in one concept to choose for further development in the report on the production layout. The previous discussions for the three concepts are summarized as followed.

The main advantage with Concept 1, All in One, is the need of a simple jig, no need for moving during production and that the whole production doesn't stop if there's a problem at one station. The disadvantages with this concept are severe. For Case 2, there are difficulties with the work-flow. All tasks for the whole production rely on one worker. For both cases there will be a lot of tools at all stations. This can be expensive but most important of all, lead to untidiness and disorder ("5S", chapter 6.1, Lean Report).

For Concept 2, In Line, the main advantages are that every worker is specialized in individual parts of the assembling. This results in fewer tools for every station. Concept 2 could be a solution for producing five units per week, but several stations will be empty when the production is scaled down. Other disadvantages with this concept are that the product has to move a lot. When down-time, the whole production stops and it would be impossible to get the product back into the assembly line.

Concept 3, Half and Half, has divided the assembly from the testing. The advantage with this is that if something goes wrong during the tests, it will not affect the assembly. This is because the concept includes a backup station which makes the concept resistant to failures and makes the production reliable. It will also allow the workers to move the product out of the way, so they can start on a new product, which reduces the down-time. The jigs can be more specialized to their respective station. The product needs to be lifted two times trough the production, from assembly to test before the finished product is mounted in a packing fixture. This is less than Concept 2, and results in a better solution for saving time and crane logistics.

From discussions with KPS, Concept 3, Half and Half, is the best concept for producing the Protector Medium Caliber. The report on the production layout is based on Concept 3, Half and Half.

© BUC, Kongsberg, Production Technology

3 Abbreviations

Abbreviation	Description
BUC	Buskerud University College
El.	Electric
FAT	Factory Acceptance Test
h	hour
IHT	In House Test
Kg	Kilo gram
KPS	Kongsberg Protech Systems
m	Meter
No	Number
Pos.	Position
Prod.	Production
Rev.	Revision
RWS	Remote weapon station
w	worker

© BUC, Kongsberg, Production Technology