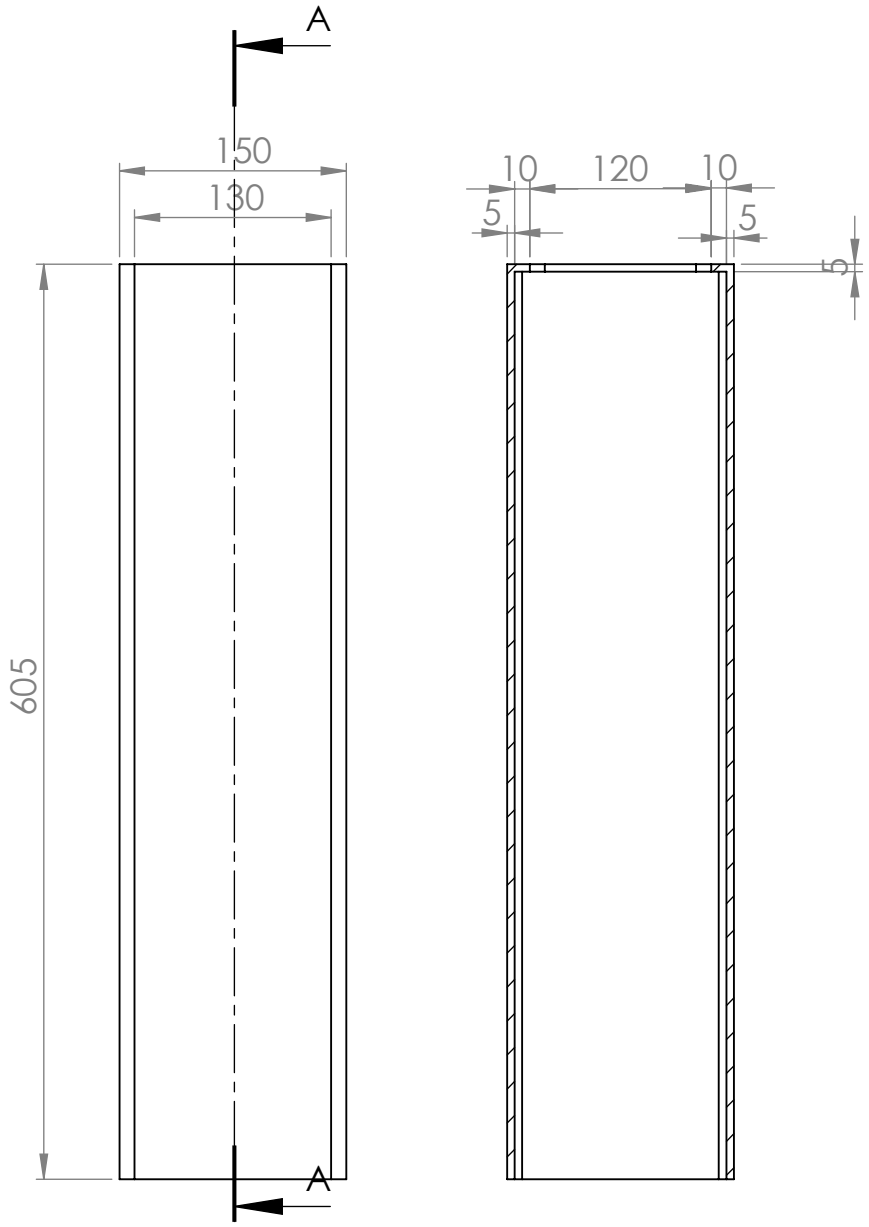

SECTION A-A

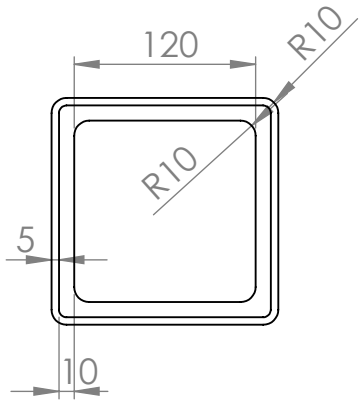

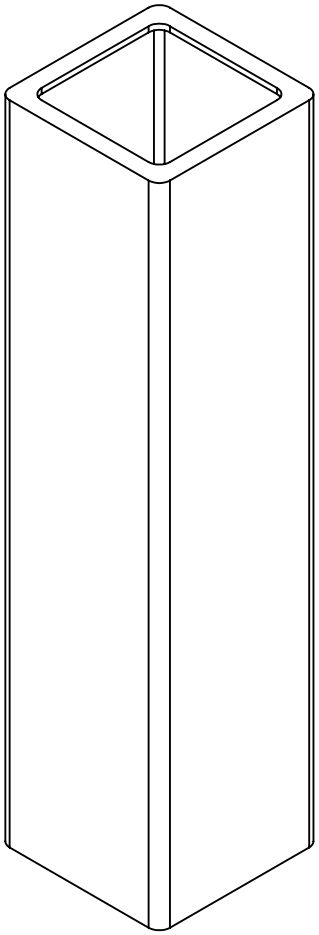

SolidWorks Student Edition.
For Academic Use Only.

TITLE: D08 Outer Sleev 150			
DESIGNER: Production Technology		DATE 2012-05-18	
All dimentions are in millimeter	SCALE: 1:5	SHEET 1 OF 1	A4