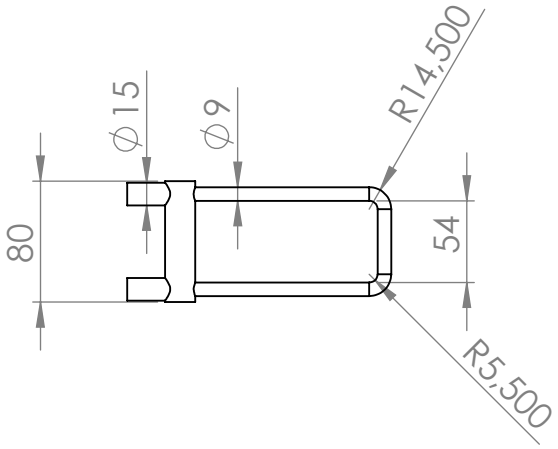

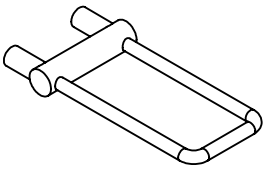

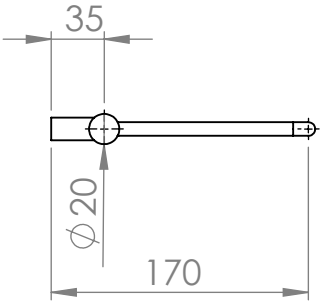

SolidWorks Student Edition.
For Academic Use Only.

TITLE: D03.4 Lock Part			
DESIGNER: Production Technology		DATE 2012-05-19	
All dimentions are in millimeter	SCALE: 1:1	SHEET 1 OF 1	A4