Document Name:	Production Layout
Project Name:	Production Technology
Project Number:	2012-2
Course:	SFHO 03200 – H11 – Bachelor Thesis with project control
Availability:	3. year, Bachelor in Engineering at BUC – Buskerud University College
Supervisor:	Kjell Enger, BUC
Contracting Entity:	Kongsberg Protech Systems
Group:	
Halvor Eide, Ørjan Ohm, Sander K. Trandem, Knut Anders Lia and Alexander Svendsen	

Document History		
Rev.	**Changes**	**Date**
-		2012-05-24

(Intentionally Left Blank)

© BUC, Kongsberg, Production Technology

List of Contents

1 Introduction 7
1.1 Document Overview 8
1.2 Document Purpose 8
2 Lean Strategy 9
3 Human Resources 11
3.1 Case 1, Five per Week 13
3.1.1 One Shift 13
3.1.2 Two Shifts 15
3.1.3 Three Shifts 16
3.1.4 Discussion 16
3.2 Case 2, One per Week 17
3.2.1 One shift 17
3.2.2 Discussion 19
4 Startup Phase 20
5 Layout 23
6 Assembly station 25
6.1 Parts 25
6.1.1 Main Frame 25
6.1.2 Main Frame Motor 28
6.1.3 Weapon Elevation Assembly 29
6.1.4 Elevation Motor 30
6.1.5 Cover Support 31
6.1.6 Electrical boxes 31
6.1.7 Cables 32
6.1.8 Weapon 34
6.1.9 Ammunition box 34
6.1.10 Sensor Unit 34
6.2 Pallet Transportation 35
6.3 Layout 36
6.4 KPI – Key Performance Indicator 39
6.5 Conclusion 40

© BUC, Kongsberg, Production Technology

7 Test Station 41
8 Backup Station 44
9 Packing Station 45
10 Overall 46
10.1 Tools 46
10.2 Cranes / Element Transport 48
10.3 One Point Lesson 49
10.4 IPS - Shelving Unit 51
10.5 Safety 53
10.5.1 Personnel Safety 53
10.5.2 Transportation 54
11 Cost Model 56
11.1 Instruction of Use 57
12 References 59
13 Abbreviations 60

List of Figures

Figure 1 - Document Relation 8
Figure 2 - Startup, Time per Unit 20
Figure 3 - The learning Curve, Time per Unit 21
Figure 4 - Layout 1, Case 1 23
Figure 5 - Layout, Case 2 24
Figure 6 - Main Frame Assembly 26
Figure 7 - Main Frame Table 1 26
Figure 8 - Main Frame table 2 27
Figure 9 - Heavy-duty Wheels 27
Figure 10 - Main Frame Table 3 27
Figure 11 - Main Frame Motor Pallet 28
Figure 12 - Weapon Elevation Pallet 29
Figure 13 - Bundle Wagon 29
Figure 14 - Weapon Cover Wagon 30
Figure 15 - Elevation Motor Pallet 30

© BUC, Kongsberg, Production Technology

Figure 16 - Pallet Trolley....31
Figure 17 - Pallet Trolley with Components....31
Figure 18 - Shelving Units, Electrical Boxes....32
Figure 19 - Cable Arrangement....33
Figure 20 - Cable Arrangement, Zoom....33
Figure 21 - Weapon Wagon....34
Figure 22 - Ammunition Box....34
Figure 23 - Sensor Unit Kit....35
Figure 24 - Pallet Trolley....35
Figure 25 - Assembly Layout, First Round....36
Figure 26 - Assembly Layout, Second Round....37
Figure 27 - Assembly Layout, Above Both....37
Figure 28 - Marking....38
Figure 29 - Assembly Layout, Marking with Detail....38
Figure 30 - Assembly Layout with KPI-lines....39
Figure 31 - Test Station....42
Figure 32 - Pallet Trolley....42
Figure 33 - Pallet Trolley with Protection Cover Components....43
Figure 34 - Backup station....44
Figure 35 - Overall Layout 2, Case 1....46
Figure 36 - Overall Layout 3, Case 1....46
Figure 37 - Tool Cabinet....48
Figure 38 - Swing Crane....49
Figure 39 - One Point Lesson [5]....50
Figure 40 - Flow Rack....51
Figure 41 - Internal IPS Shelving Unit....52
Figure 42 - External IPS Shelving Unit....52
Figure 43 - Personal Safety Equipment Signs [8]....53
Figure 44 - Forklift Turning Radius Illustration....54
Figure 45 - Pedestrian Street....55
Figure 46 - Cost Model, Initial Cost....56
Figure 47 - Cost Model, Layout Information....56

© BUC, Kongsberg, Production Technology

Figure 48 - Cost Model, Product Flow Matrix 57
Figure 49 - Cost Model, Input 57
Figure 50 - Cost Model, Extra Cost and Total Cost 58

List of Tables

Table 1 - Assembly Stream 12
Table 2 - Flow of Testers, Five per Week, One Shift 13
Table 3 - Five per Week, One Shift 14
Table 4 - Cost of One Shift, Five per Week 14
Table 5 - Five per Week, Two Shifts 15
Table 6 - Cost of Two Shifts, One per Day 16
Table 7 - One per Week, One Shift 18
Table 8 - One per Week, One Shift Two 19
Table 9 - Cost of Daytime, One per Week 19
Table 10 - Startup, First Period, Case 1 22
Table 11 - Parts for Assembly 25
Table 12 - Processes of Testing 41
Table 13 - Cranes 49

© BUC, Kongsberg, Production Technology

1 Introduction

Production Technology is a Bachelor Thesis taken on by five mechanical engineering students from Buskerud University College in Kongsberg.

The Scope is limited to five study credits for the first semester (fall 2011), then 15 study credits for the second semester (spring 2012). This is estimated to 550 work hours per group member. There will be a higher priority on documentation then in a normal industry. This will give a better basis for evaluating the project.

The purpose of this project is to evaluate production models for Kongsberg Protech Systems (KPS). Kongsberg Protech Systems has developed a new product called Protector Medium Caliber that is going into production. To make the production effective they need to develop a specific production model that they can integrate in all their locations, and in different production scale.

The company has other similar products that are already in production. In the existing production there are used several Lean tools to make the production as efficient as possible. The difference between these products and the new one is the size and weight. The existing products are of smaller caliber and therefore smaller in size and easier to handle, than the new Protector Medium Caliber. Due to the size and weight of the product they need to develop a completely new assembly process. The production process is the backbone in the company and it is vital for the company to compete with others.

Our assignment is to make a main study that evaluates different production models and create concepts for the production of Protector Medium Caliber. The production is divided into two cases with different production rate, where Case 1 handles high rate production and Case 2 handles low rate production. For both cases, we will consider the need of cranes, lifts and other equipment to make the assembly as easy and effective as possible. In the production of Protector Medium Caliber there will be a need for a jig or a fixture to hold the product while assembling and testing. This jig will be designed in SolidWorks and integrated in our production model.

To be able to make a good analysis, we need to learn about production technologies and Lean manufacturing. By learning the basics of these subjects, we will ensure effective manufacturing of quality products and a safe and good environment for the workers. To accomplish this, two generic pre-studies will be produced as supporting literature. One study for production technologies and one study for Lean manufacturing. The two studies will be used as a support for arguments for the different choices and conclusions we make in our main study.

This Bachelor Thesis is a theoretical study and takes form of a written report with drawings and illustrations. The sources used are internet, personnel of KPS and literature in form of books. Project expenses are literature and printing of reports and poster.

© BUC, Kongsberg, Production Technology

1.1 Document Overview

This document is one of many reports in the Bachelor Thesis 2012-2.

The Figure below will give an overview and placement of the reports and documents for the Bachelor Thesis 2012-2. The textboxes represents documents and the green box is representing this document. The Appendix documents are not listed.

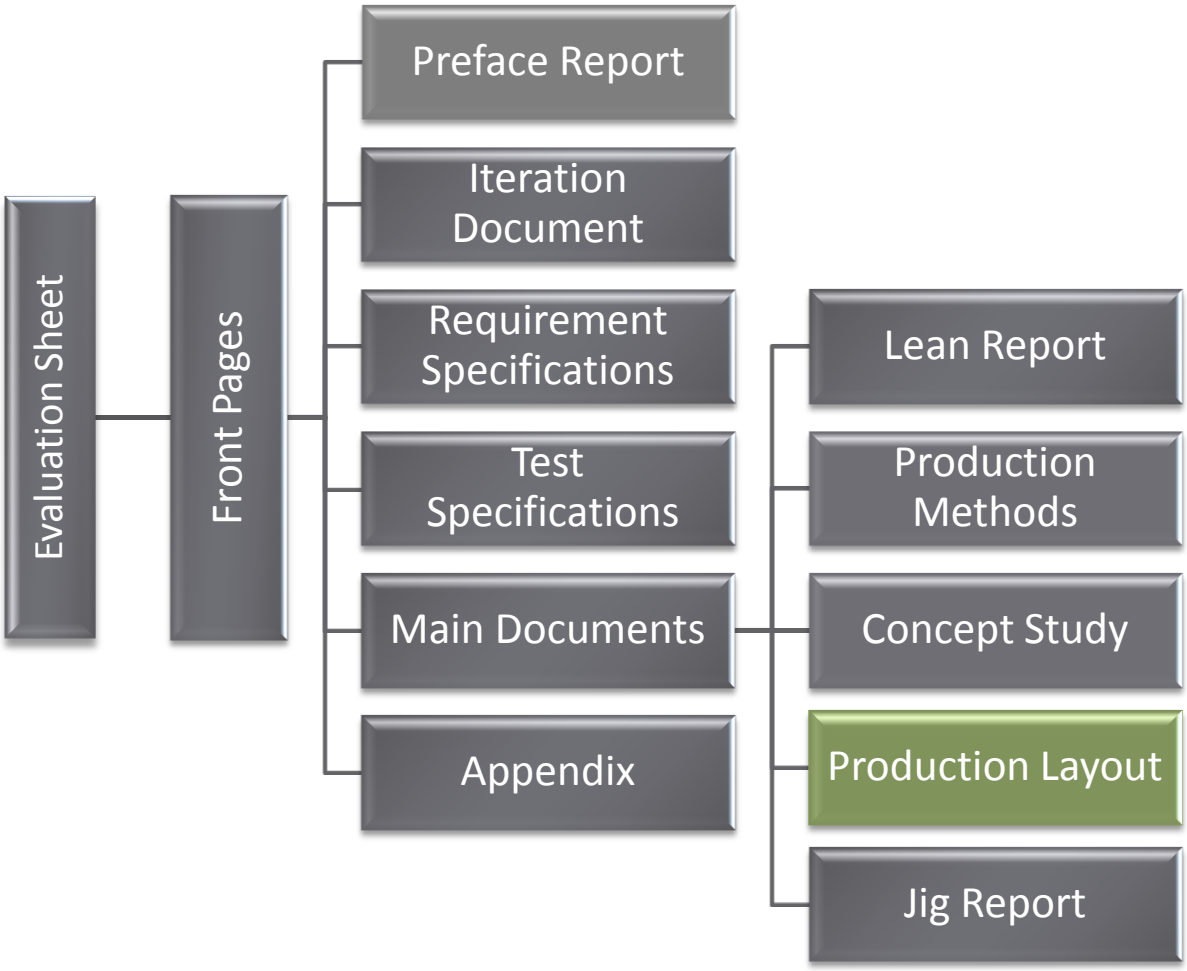

Figure 1 - Document Relation

1.2 Document Purpose

This document is a continuation of the report, Concept Study. The Concept Study report concludes with a chosen concept for the production of Protector Medium Caliber. The chosen concept is in this report developed in more detail, at a general level for the whole process of production. The report describes layout solutions for different production scales and present all elements involved in the production area.

© BUC, Kongsberg, Production Technology

2 Lean Strategy

The Concept Study report concludes Concept 3, half and half, as the chosen concept for our assignment. We have looked at several steps in the process I. e. time schedule for the assembly, test and packaging. We did this to get a clear view of the concept. On the other hand, there are a lot of factors that are not taken into consideration.

This report will discuss and evaluate different subjects related to the layout that has not been properly resolved. It is therefore necessary to describe the concept at this stage, to get a better understanding of what we are working on. Concept 3, half and half, is based on the principle of separating the assembly, test and packing into a dedicated area including all the necessary equipment and fixtures. We don't want to move neither the product nor the workers unnecessary ("Lean Strategy", chapter 6, Lean Report) and this concept takes that into consideration. The workers will have their own work areas and the product will only be moved two times in its production cycle.

Before we can plan a production layout it is important to define the goals that the business wants to accomplish. With clear defined goals, it is easier to find the right strategy. The goal for KPS is to reduce the circulation rate ("Lean Strategy", chapter 6, Lean Report) as much as possible. To accomplish this we need to implement the lean strategy – continuously elimination of waste to achieve high flow efficiency (low circulation rate). Of the three concepts, Concept 3 was the one with the highest flow efficiency and is also one reason to why we chose that concept for further improvement.

There are several advantages with choosing a strategy with high flow efficiency:

- Capital and capacity is not held unnecessary.
  Capital: If the product is held and stored over a long period this will result in capital bound. The different suppliers want their payment after a short period. If the product is stored, or the supplies are stored over a long period before the customer pays for the final product, the capital is held unnecessary.
  Capacity: if the circulation rate is low, the product will not bind capacity in form of attention from workers, information flow, planning and other types of recourses. This can also be customers that want to be informed at several stages of the production; this is a demand of resources.
- Lower cost of storage and management. If the product or any sub components is stored, it will demand a need of storage. It will also demand a need of handling (workers), administration, building cost, electricity, security and logistics management.
- Less transportation. The product needs to be transported at several stages. If the circulation rate is increased, this will demand a greater amount of handling. This will also affect the transportation of information. With lower flow efficiency, the information connected to a product is often read unnecessary. This is due to rework when starting on a product that has been stored for some days. This can be compared to not answering an email immediately if you can answer it. If you just delay it, it will often result in rereading it at least twice.

© BUC, Kongsberg, Production Technology

- Maintain the overview. A lot of units in production at the same time can easily lead to disorder. There will be more materials and sub components floating in the production area, the workers might therefore lose the overview. If you lose the overview, you need to spend more time in finding what you are looking for, which is waste of time. This will also affect the information flow. If a lot of units are being stored after they are finished, the business will spend unnecessary time with categorizing, structuring and sort because of the lack of overview. If a customer demands some changes to a product, it might be difficult to know where the product is in the process.
  This might also be the case if there are more workers involved, more workers to handle might lead to lack of overview. In our production, the chosen strategy should not affect the amount of workers, just the circulation rate.
- Lower rate of human errors. It is shown that if a product has a longer period in production (circulation rate) with more units produced at the same time the human error will increase. This is simply because humans tend to forget when there are several units to keep track on, and operations that are stretched over a long period.
- Lower rate of errors. If a production layout consist of a lot of flow units, it might be difficult to discover any errors or quality issues before a whole batch is finished. A shorter circulation rate means less time between each feedback loop.
- Less need of secondary demands. If the customer is waiting for the product over a long period, it is more likely that secondary demands will occur more frequently. The customer might want information of the process or other demands. This is unnecessary use of resources, which should be used to value adding activities (“Lean Strategy”, chapter 6, Lean Report).
- Less risk for breach of contract. If the customer needs to wait for the product, he/her might change the specification due to changes in the market or changes in the customer’s needs. In our production the product is complex and it’s therefore not likely that the customer easily can choose another manufacturer, but changes in the contract might occur.
  [1]

© BUC, Kongsberg, Production Technology

3 Human Resources

From the selection of Concept 3 which we call “Half and Half”, we will study closer how the production can be done in terms of manpower. As mentioned in the conclusion of the Concept Study, this concept requires two assembly fixtures, three test fixtures, one packing fixture and one backup fixture for Case 1 (five per week) and one assembly fixture, one test fixture, one packing fixture and one backup fixture for Case 2 (one per week).

The only need of work skills for the workers in the production process is either a mechanical, electrical or process certificate or other relevant experience to do the assembly operations. The test operations need more specialized workers. This will either be an engineer with relevant experience or a technician that will be trained and specialized. In this coordination of human resources we will not include the needed manpower for the backup station. If a product has to be moved to the backup station, there will be an own team from the engineering department that will execute the troubleshooting.

The estimated effective work hours, per day, for one worker are six hours (requirement K03.19). And total work hours are 7.5 hours per day (requirement K03.20). There are five work days per week. For the inspector we assume that effective and salaried hours is the same. The inspector will have different inspections in a facility (different products). We therefore assume that the cost of his work is equal to two salaried hours.

There is an opportunity to reduce the assembly time by adding more manpower, but with a maximum of two workers per assembly station. For instance two workers per day, means twelve effective work hours. It is not possible to reduce the test or final inspection time by adding more manpower to these stations; therefore it will be no need for more than one person on test stations (requirement K03.15). The assembly takes eighteen hours, excluding protection cover. This means that if two persons execute the assembly on daytime, the product will be ready for testing after nine hours or 1.5 work day.

There is a requirement that there is no more than one worker at every test station. The IHT and FAT times is locked, and takes six and ten hours, where the product first will conduct an IHT smoothly before a FAT test is carried (requirement K03.18). These testes will also run separately from the assembling (requirement K03.16). This means one person testing for three days working only daytime. The final inspection will be executed by one specialized worker/quality manager. There is an extra requirement from KPS that there is at least 1.5 and not more than two workers at the assembly station at all times (requirement K03.13 and K03.14). The reason for not having more than two workers is that it will be crowded and it is not economically viable. Because handling of units/boxes and cranes while assembling there should be at least one worker at the assembly station plus an extra person that can assist when necessary (noted 1.5 worker). This requirement came up later in the process, and should be considered in the following parts of the report. This will not affect the chosen concept. Table 1 shows the time for each process in the production.

© BUC, Kongsberg, Production Technology

Table 1 - Assembly Stream

Assembly Stream		
No	**Elements**	**Time**
1	Main frame	2h
2	Weapon elevation	3h
3	Elevation motor	2h
4	Cover support	2h
5	El. Box: Ethernet switch	4h
	El. Box: GIU box	
	El. Box: Battery box	
	El. Box: MSU 3x	
	El. Box: GCU box	
	El. Box: Charger unit 2x	
	El. Box: PDU	
	El. Box: HPDU & Coax cocking amp	
6	64 Cables	2h
7	Weapon & ammo box	2h
8	Sensor unit	1h
9	IHT (In house test)	6h
10	Protection cover	2h
11	FAT(factory acceptance test)	10h
12	Final inspection	2h
13	Packing	4h
		= 42h

© BUC, Kongsberg, Production Technology

3.1 Case 1, Five per Week

The production process can be executed in several ways, regarding shifts. There is a possibility to work daytime, evenings and nights to satisfy the requirement of producing five products per week.

When producing one product per day, the process design determines how we should set up the shifts. It can be all from having many workers on daytime working on several stations sequentially, or have few operational stations and several shifts working both day and night. The number of fixtures is predefined for the chosen concept, as mentioned earlier.

3.1.1 One Shift

By working only daytime, Monday to Friday, there is a possibility to have all the fixtures operational. By having three workers to execute the assembly on the two assembly stations, this part can be done in two days, or twelve effective hours. When a product is assembled and moved to the test station, the workers will start up with a new assembly. When the IHT and FAT is ready, the product will be moved to a packing area where a quality inspector will have a final inspection of the product before it is packed. The tests take three days; with three testers they should be able to handle all units from the assembling. After a startup phase it will be possible to produce one product per day. This is illustrated in Table 2 below.

Table 2 - Flow of Testers, Five per Week, One Shift

	Unit 1	**Unit 2**	**Unit 3**	**Unit 4**	**Unit 5**
Day 1	Assembly 1				
Day 2	Assembly 1	Assembly 2			
Day 3	Tester 1	Assembly 2	Assembly 1		
Day 4	Tester 1	Tester 2	Assembly 1	Assembly 2	
Day 5	Tester 1	Tester 2	Tester 3	Assembly 2	Assembly 1
Day 6		Tester 2	Tester 3	Tester 1	Assembly 1
Day 7			Tester 3	Tester 1	Tester 2
Day 8				Tester 1	Tester 2
Day 9					Tester 2

Inspection and packing take one day, and will be done on a separate packing fixture after the tests are executed. This will result in producing one product per day. The backup fixture will only be used in case of failure. Table 3 illustrates the steps for one product and shows the number of workers multiplied with effective work hours for each step in the production. The grey color in the table indicates that these operations will be done parallel with the other processes in a separate area and not interrupt in any way. The packer will have a spare time of

© BUC, Kongsberg, Production Technology

two effective hours every day, while the inspector works; this time should be used to inspect the production area. It should be developed a check form which can be used to control safety aspects and orderliness of the production area ("5S", chapter 4.1, Lean Report).

Table 3 - Five per Week, One Shift

No.	Process	Day 1	Day 2	Day 3	Day 4	Day 5	Day 6
1	Main frame	1.5w * 1.33h					
2	Weapon elevation	1.5w * 2h					
3	Elevation motor	1.5w * 0.33h					
4	Cover support	1.5w * 0.33h					
5	El. boxes		1.5w * 1.66h				
6	Cables		1.5w * 0.33h				
7	Weapon /ammunition		1.5w * 0.33h				
8	Sensor unit		1.5w * 0.66h				
9	IHT			1w * 6h			
10	Protection cover				1w * 2h		
11	FAT				1w * 4h	1w * 6h	
12	Final inspection						1w * 2h
13	Packing						1w * 4h

As we can see, the product will be finished and ready for shipment after only five days. This means that the circulation rate will be five days, and the cycle time will of course be one day (five per week). This gives the highest possible flow efficiency with our requirements and using only daytime workers. We could reduce this circulation rate with one day if we handle the inspection and packing at the evening as mentioned earlier, this would increase the flow efficiency which is our goal ("Lean strategy", chapter 6, Lean Report). On the other hand, this might not be the most important change for achieving high flow efficiency, since both packing and inspection can be value adding activities. To minimize the circulation rate by not leaving the product waiting before testing, or waiting for the next step in the assembly process is a more important goal. The total need of manpower is three assembly workers, three testers, one packer and the inspector. The total salaried work hours per week will be 272.5 hours, this include 7.5 hour for a work crew of seven, five days a week plus two hours of inspection every day. Table 4 shows the weekly salary cost for this solution.

Table 4 - Cost of One Shift, Five per Week

Cost Drivers	Salary Cost
Personnel	272.5 h/week * 700 NOK/h = 190 750 NOK/week

© BUC, Kongsberg, Production Technology

3.1.2 Two Shifts

By working day and evening shifts, Monday to Friday, the effective work hours can be increased from six to twelve hours per day. This means that if two workers do the assembly, one product will be assembled after 1.5 complete workdays or within two shifts. This means that the workers, who assemble on the evening shift, can pack the finished product from another unit. The next day the workers in the assembly area will start on assembling a new unit. The tests and inspection are done in two days. With two testers working day time and one tester working in the evening this will result in producing one product each day. The evening tester will work on unit one the first day, unit two the next day and so on. This means that there is no need for more than three operational stations, one assembly fixture and two IHT/FAT fixtures. The other assembly fixture and test fixture can therefore be leaved unused.

In relation to this there will be two persons on each assembly jig and one person on each test jig. The backup fixture will only be used in cause of failure.

The assembly workers on the evening shift will only work five effective hours, they can therefore inspect the production area. It should be developed a check form which can be used to control safety aspects or cleanliness of the production area. Since they are two, this will add up to two effective hours every evening, which should be plenty of time to inspect and solve problems (“5S”, chapter 6.1, Lean Report).

Table 5 illustrates the steps for one product and shows the number of workers multiplied with effective work hours for each step in the production.

Table 5 - Five per Week, Two Shifts

	Day 1			**Day 2**			**Day 3**		
	No	**Process**		**No**	**Process**		**No**	**Process**	
Day Shift	1	Main frame	2w * 1h	9	IHT	1w * 6h	11	FAT	1w * 6h
	2	Weapon elevation	2w * 1.5h						
	3	Elevation motor	2w* 1h						
	4	Cover support	2w * 1h						
	5	El. boxes	2w * 1.5h						
Evening Shift	5	El. boxes	2w * 0.5h	10	Protection cover	1w * 2h	12	Final inspection	1w * 2h
	6	Cables	2w * 1h	11	FAT	1w * 4h	13	Packing	2w * 2h
	7	Weapon and ammunition	2w * 1h						
	8	Sensor unit	2w * 0.5h						

As we can see, the product will be finished and ready for shipment after only three days. This means that the circulation rate will be three days, and the cycle time will of course be one day (five per week). This gives the highest possible flow efficiency with our requirements and using two shifts. We could use more personnel on the assembly station to achieve a shorter

© BUC, Kongsberg, Production Technology

circulation rate, but this would be at the expense of more non-value adding activities and general waiting for the product. This would be more like a strategy of high resource efficiency, which is not a way of lean thinking ("Lean strategy", chapter 6, Lean Report). This solution is therefore best suited for our assignment regarding two shifts.

The total need of manpower are seven person`s (four assembly workers and three testers) plus the inspector. The total work hours per week will therefore be 272.5 hours, seven persons working 7.5 hour per day, five days a week plus two hours of inspection every day.

Table 6 shows the weekly salary cost for this solution. The additional salary for working evenings is not included.

Table 6 - Cost of Two Shifts, One per Day

Cost Drivers	Salary Cost
Personnel	272.5 h/week * 700 NOK/h = 190 750 NOK/week

3.1.3 Three Shifts

There is a possibility to work day, evening and night shifts to satisfy the requirement of producing one product per day. At KPS this is not an option to work night shifts. So this will no further be discussed.

3.1.4 Discussion

As we can see from the two solutions above, the two shifts have the same salary cost as working only daytime. But in the cost calculation the cost of working evening is not included. This means that the cost for this solution can be higher than calculated.

In these solutions the assembly and the tests will be executed by different workers, which mean that there are different requirements of training/specialization. For the two shifts solution, one tester will start the test procedure on the evening shift and another will continue on the next day shift. This requires coordination which is not necessary for the solution of daytime working.

The capacity of the two solutions can be increased by increasing the manpower. In example it can be used three shifts to increase the capacity. For the solution of two shifts there will be an unused test jig, if this jig is equipped with tools, it might be used as a production jig. By increasing the manpower this might be a solution to increase the capacity. With the daytime solution it might not be easy to increase the capacity, because of the restriction in production area and the fact that all jigs are in use.

© BUC, Kongsberg, Production Technology

3.2 Case 2, One per Week

The need for jigs will be one jig for assembly, one for tests, and one for backup.

Since the production takes forty-two hours, and there are thirty effective work hours a week, there is a need to compress the production to satisfy the requirement of producing one product per week.

3.2.1 One shift

As mentioned earlier, this concept requires one production jig, one test jig, one packing fixture and one backup jig. To compress the production to satisfy the requirement of producing one product per week, it will be a need of two workers to do the assembly. The assembly can be done in 1.5 days, which means that the product will be moved on to the test jig, tested and inspected the last 3.5 days of the week. The packing can be done parallel with the tests; the unit shall therefore be moved to a separate packing fixture after the final inspection so it can be packed the next week.

By executing the production this way, there is a need for two workers plus the inspector. One of the two workers that assemblies will execute the tests and the other worker will do the packing.

From this, one worker will not have tasks the whole week. So there is a need to find tasks for this person. One example is to have responsibility for controlling equipment and work place. If this person works three days a week at this production area, it will add up to a total of five effective spare hours. In addition to this, the other worker will have a spare time of three hours every week (day two and five). Eight effective hours of production area inspection might be too much for a small production like this.

Table 7 shows the number of workers multiplied with effective work hours for each step in the production. The yellow color in the table indicates that the packing will be done two days after the assembly is tested and parallel with testing of a new product.

© BUC, Kongsberg, Production Technology

Table 7 - One per Week, One Shift

No	Process	Day 1	Day 2	Day 3/8	Day 4	Day 5
1	Main frame	2w * 1h				
2	Weapon elevation	2w * 1.5h				
3	Elevation motor	2w * 1h				
4	Cover support	2w * 1h				
5	El. boxes	2w * 1.5h	2w * 0.5h			
6	Cables		2w * 1h			
7	Weapon /ammunition		2w * 1h			
8	Sensor unit		2w * 0.5h			
9	IHT		1w * 2h	1w * 4h		
10	Protection cover			1w * 2h		
11	FAT				1w * 6h	1w * 4h
12	Final inspection					1w * 2h
13	Packing			1w * 4h		

The disadvantage with this is as mentioned earlier that one worker will have a lot of spare time. To solve this we can use the same matrix, but instead of only one worker packing the product, the other worker can assist for one hour, before he/her starts on the IHT. This means that the full-time worker will have two effective hours, every fifth day to inspect the production area. The part-time worker will only work two days a week at this production facility, and can therefore be useful at other areas the other days.

© BUC, Kongsberg, Production Technology

Table 8 - One per Week, One Shift Two

No	Process	Day 1	Day 2/6	Day 3	Day 4	Day 5
1	Main frame	2w * 1h				
2	Weapon elevation	2w * 1.5h				
3	Elevation motor	2w * 1h				
4	Cover support	2w * 1h				
5	El. boxes	2w * 1.5h	2w *0.5h			
6	Cables		2w * 1h			
7	Weapon /ammunition		2w * 1h			
8	Sensor unit		2w * 0.5h			
9	IHT		1w * 2h	1w * 4h		
10	Protection cover			1w * 2h		
11	FAT				1w * 6h	1w * 4h
12	Final inspection					1w * 2h
13	Packing		1w * 4h			

The total need of manpower is two persons plus the inspector. This will add up to a total of 54.5 work hours. This includes one person working full-time (7.5 hours, five days a week) and one person working full-time two days a week, plus the inspector working two hours a week.

Table 9 shows the weekly salary cost for this solution

Table 9 - Cost of Daytime, One per Week

Cost Drivers	Salary Cost
Personnel	54.5 h/week * 700 NOK/h = 38 150 NOK/week

3.2.2 Discussion

When producing one product per week the need of jigs and manpower are only three fixtures (plus backup) and two persons (plus the inspector). If we want to increase the production some, it should be a solution to increase the manpower.

In this solution the assembly and tests are executed by the same persons, which mean that the workers need training/specialization for both the assembly and tests.

© BUC, Kongsberg, Production Technology

4 Startup Phase

The startup phase needs to be evaluated to get a clearer view of the whole production planning. In the beginning of a new project, the workers and others involved must be given some time to get sufficient experience. After producing a series of units, when the volume is increased, the production will become a lot more productive. How efficient the production will be is described in the previous chapters (Human Resources) where the hours of assembly elements are shown, the assembly time is set to eighteen hours. This would be an optimal circulation time for the assembly. The testing and the other parts of production will not be affected by the startup phase, and should run with the same time as mentioned earlier, even in the startup phase.
The number of units produced before the circulation time for assembly is eighteen hours, is set to a hundred units. This is equal to the number of units produced after twenty weeks for Case 1. For Case 2, it will take hundred weeks to accomplish the same amount of units as Case 1.

To evaluate the startup phase, we need to implement a new term: the learning curve. To understand the learning curve, we need to describe the learning percentage. The learning percentage is described as a constant percentage of decrease in assembly time each time the quantity of units is doubled. If the rate of improvement is 20 % between each batch of doubled quantities, then the learning percentage would be 80 % (100-20=80). Based on NASA's calculation [2], we choose a learning percentage of 90 % which is common in different production situations (electronics manufacturing, machining, welding operations etc.). In our assignment the parts will arrive at pallets and with crane, so most of the production will be done with preassembled parts (see chapter 6).
To find the learning curve based on: the time per unit for full production (18 hours), number of units before full production (100 units) and the learning percentage (90 %), we need to calculate the total time spent on producing 100 units. Then we need to divide this number with the doubled learning percent and divide it on 100. The formula would be:

$\frac{18*100}{0.9*2}$. This is equal to the total time spent on producing half as many units, because: time spent on producing *x* units = time spent on producing $\frac{x}{2}$ units * 2 * 0.90. We will continue this process until we have reached about one produced unit.

If we use a spreadsheet to calculate the total time for production with different amount of produced units, we will find the following relationship (Figure 2).

Case 1 (5 units/week)							
				Numb. units	%	Tot. time	Time per unit
				0,8	90	29,4	37,6
Production:	= 5 Unit/week * 20 weeks	= 100 units		1,6	90	52,9	33,9
Ideal Production time		= 18 hours		3,1	90	95,3	30,5
Learning		= 90 %		6,3	90	171,5	27,4
				12,5	90	308,6	24,7
				25,0	90	555,6	22,2
				50,0	90	1000,0	20,0
				100	90	1800	18

Figure 2 - Startup, Time per Unit

© BUC, Kongsberg, Production Technology

The time for producing the first unit will be 38 hours. This calculation is based on Case 1, but since the calculation is based on total number of produced units, it will be the same for Case 2 only with an extended amount of time. The learning curve based on number of units will therefore be the same for both case 1 and 2 (see Figure 3):

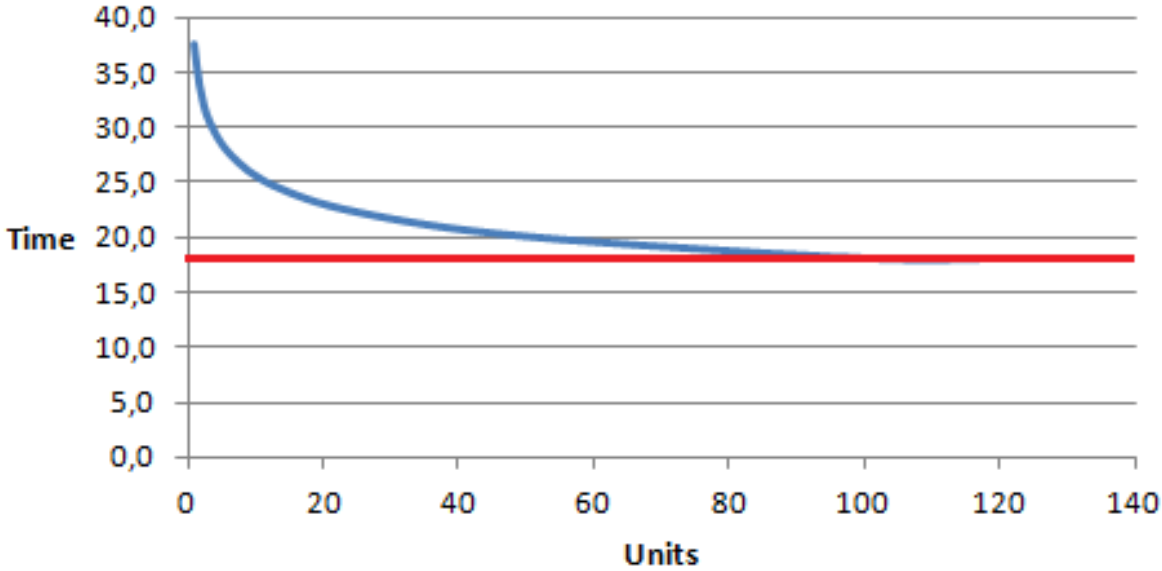

Figure 3 - The learning Curve, Time per Unit

In Figure 3 above the assembly time per unit will end up at 18 hours/unit (marked in red) after 100 produced units. The next two sections will elaborate how this startup phase could be solved regarding personnel to solve the demand within Case 1 for a better understanding.

First period:

As we can see from Figure 3, there will be a lot of changes in the assembly time at the very start because each doubled batch will give a ten percent decrease in time for the next batch. We will therefore look at the first five produced units, the average time for producing five units would be about: $37.6 * (0.9^{2.5}) = 28.9$ hours per unit. To have a small safety margin, we will use 30 hours per unit for the first five units. This will be in addition to eighteen hours or three days of testing. The calculation is based on the following: For each time the production is doubled, the assembly time will decrease with 10 % (0.9). Since we calculate with five units and not six, there will be $3 * \frac{5}{6} = 2.5$ cycles of doubled batches.

In this first period, there is a need of five assembly personnel divided on two assembly jigs, two persons permanent plus one person with specified work tasks at both stations. We can assume that two and a half men are equal to 15 effective hours for each assembly jig, each day. There is a requirement of not having more than two workers in each assembly cell because it will not be efficient. On the other hand, the startup phase will have a demand of more workers, and will not be affected by this requirement. There is also a need for three test stations. The logistic of personnel for the assembly jig will therefore be as seen in Table 10.

© BUC, Kongsberg, Production Technology

Table 10 - Startup, First Period, Case 1

	Unit 1	Unit 2	Unit 3	Unit 4	Unit 5	Unit 6
Day 1	Assembly 1					
Day 2	Assembly 1	Assembly 2				
Day 3	Tester 1	Assembly 2	Assembly 1			
Day 4	Tester 1	Tester 2	Assembly 1	Assembly 2		
Day 5	Tester 1	Tester 2	Tester 3	Assembly 2	Assembly 1	
Day 6		Tester 2	Tester 3	Tester 1	Assembly 1	Assembly 2
Day 7			Tester 3	Tester 1	Tester 2	Assembly 2
Day 8				Tester 1	Tester 2	Tester 3
Day 9					Tester 2	Tester 3
Day 10						Tester 3

As we can see, the 6th unit will be finished (without packing and inspection) after ten days or two weeks for a production of five per week (Case 1).

The second period:

The second and last startup period will be the period where the demand of assembly workers can be reduced from five to four, divided on two assembly stations. Four assembly workers divided on two assembly stations is equal to 12 effective hours each day on each station. With the same logistics as in Table 10, it can be produced five units per week if the effective assembly time is at maximum 24 hours. An assembly time equal 24 hours can be reached after $(24.7 - 24/\frac{24.7-22.2}{25-12.5}) + 12.5 = 16 \text{ produced units}$, by using interpolation from Figure 2. In other words, after sixteen produced units, the demand of assembly workers can be reduced to four.

This will be the last period, before a demand of three assembly workers occur, as described in chapter 3.1.1.

© BUC, Kongsberg, Production Technology

5 Layout

As a conclusion of the previous chapters of Human Resources and Startup Phase, we can present the overall layout for the two cases. These layouts are seen in Figure 4 (Case 1) and Figure 5 (Case 2). These layouts can also be found in appendix E02 and E03 with higher resolution.

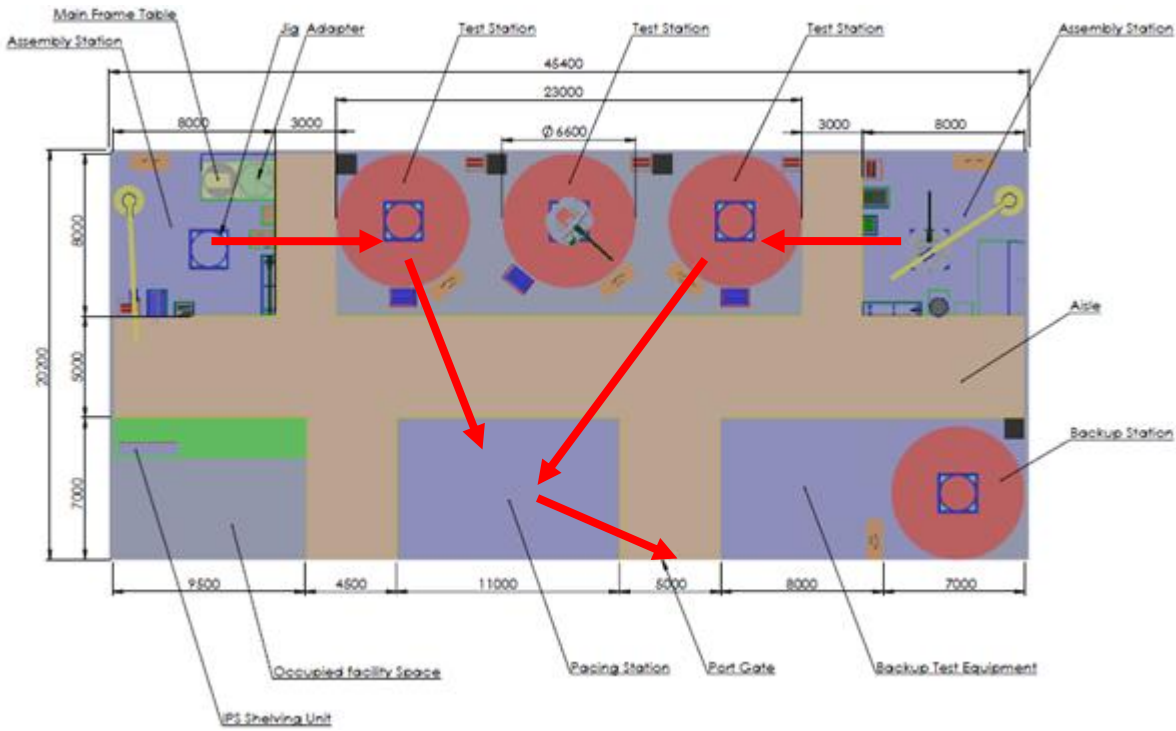

Figure 4 - Layout 1, Case 1

Figure 4 shows the layout for Case 1 which produces five units per week. This layout has two assembly stations, three test stations, one backup station and one packing station. The figure also shows the aisle for transportation by forklift and pallet truck. The red arrows indicate the transportation of the product through the facility. A reduction of time for transportation is an important part of the lean strategy. For the case of producing five units per week a reduction in the length for transportation between the stations will be handled by placing the test stations in between the assembly stations. The packing area is also close to each test station.

© BUC, Kongsberg, Production Technology

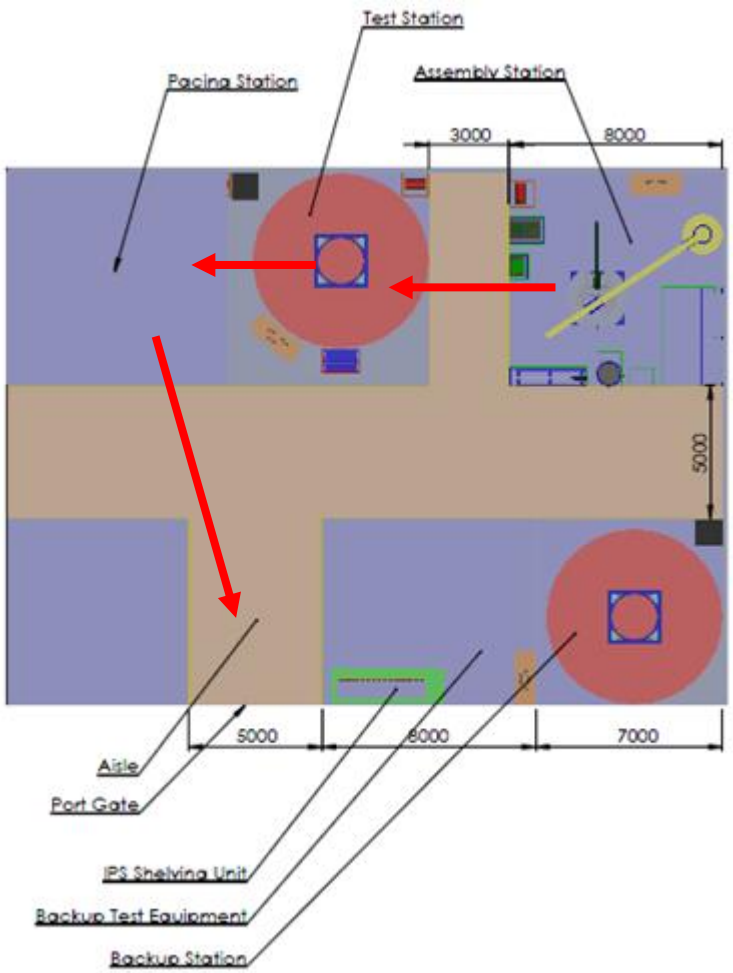

Figure 5 - Layout, Case 2

Figure 5 shows the layout for Case 2, which produces one unit per week. This layout has one assembly station, one test station, one backup station and one packing station. The figure also shows the aisle for transportation by forklift and pallet truck. The red arrows indicate the transportation of the product. A reduction of time for transportation is an important part of the Lean strategy. The stations are therefore placed in such a way that the distance between them will be minimal.

The following parts of this report will go deeper into each element of this layout, and describe several details developed for this production. The following parts are:

6. Assembly station

7. Test Station

8. Backup Station

9. Packing Station

10. Overall

The last part of this report is a cost model for the production layout, which can be found in chapter 11 Cost Model.

© BUC, Kongsberg, Production Technology

6 Assembly station

To accomplish a good material flow in our production, we will look closer at the assembly station, based on a lean strategy. The basic of a lean strategy is to reduce to circulation rate by eliminating waste, as described in chapter 2.

6.1 Parts

This chapter will explain each part of the assembly done at the assembly station in detail, and then explain the function of the storage/transportation equipment developed for the parts. Each part or subassembly is given the number 1 – 10 as seen in Table 11.

Table 11 - Parts for Assembly

No	Parts for Assembly	Time
1	Main frame	2h
2	Main frame motor	
3	Weapon elevation assembly	3h
4	Elevation motor	2h
5	Cover support	2h
6	El. Box: Ethernet switch	4h
	El. Box: GIU box	
	El. Box: Battery box	
	El. Box: MSU 3x	
	El. Box: GCU box	
	El. Box: Charger unit 2x	
	El. Box: PDU	
	El. Box: HPDU & Coax cocking amp	
7	64 Cables	2h
8	Weapon	2h
9	Ammunition box	
10	Sensor unit	1h

6.1.1 Main Frame

The first part of the assembly process is to assemble the main frame. This assembly process consists of the mainframe and three rings that will enable the rotating functionality in the weapon station. At the bottom of the assembly there will be fitted an adaptor. The main purpose of this adapter is to protect the product from damage when it is moved. The adapter is

© BUC, Kongsberg, Production Technology

also where the crane will be connected for lifting, before the cover support is mounted with its lifting ears for lifting of the whole product. The adaptor is described in more detail, later in the report ("Adapter with Lock System", chapter 4.1, Jig report). The main frame assembly process is illustrated in Figure 6.

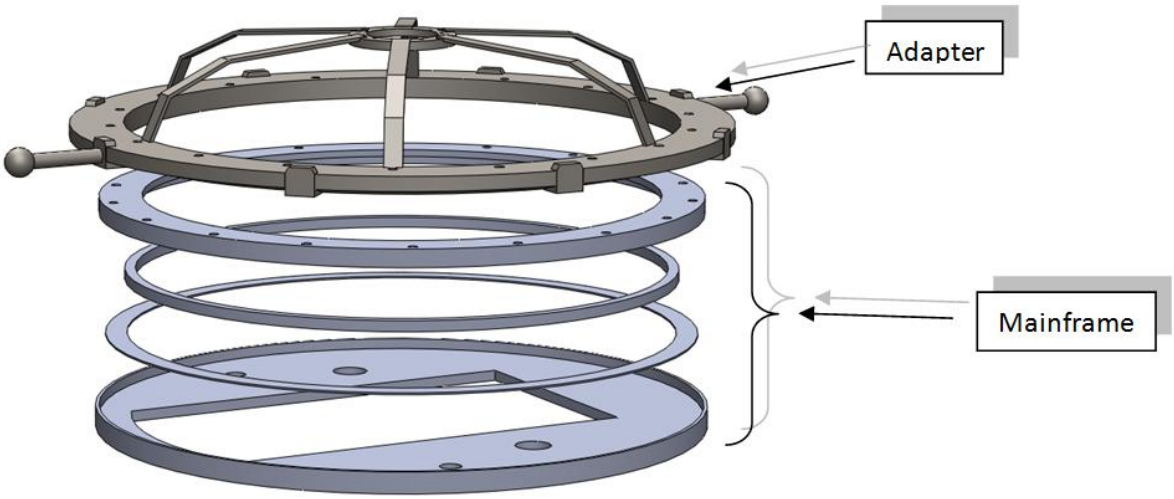

Figure 6 - Main Frame Assembly

This assembly needs to be compiled upside-down to get the parts in place. The main frame can therefore not be placed directly on to the jig. With this in mind we concluded that the assembly station needed a table to do this process, before the adapter was connected. It would also be convenient if the table could be lifted with a forklift or pallet truck. The packing can therefore take place at the store or where the delivery of parts takes place. We have made a design that accommodates these demands, as shown in Figure 7. The table was also designed with a slot for the main frame. The slot shall prevent the main frame from falling off the table, both during assembling and transportation.

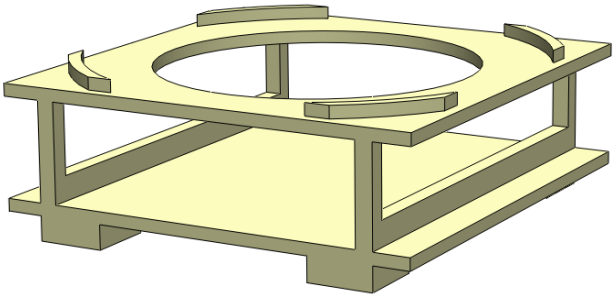

Figure 7 - Main Frame Table 1

To save space when storing the parts for the mainframe assembly in the production area, we wanted to extend the table with a shelving unit. This rack will consist of three shelves, for parts that are going to be assembled on top of the main frame ring. The assembly elements are shown in Figure 6. On top of these three shelves, there will be a spot for the adapter. The adapter can therefore easily be connected to the main frame assembly. The adapter is connected to the crane when this operation is executed. This rack and the table are shown in Figure 8.

© BUC, Kongsberg, Production Technology

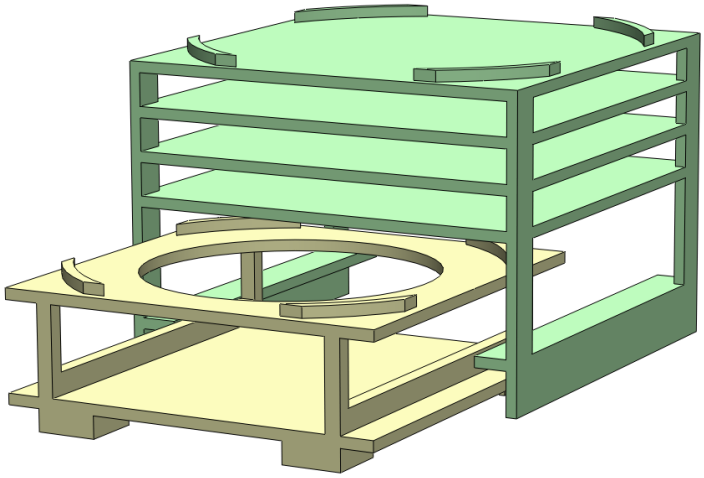

Figure 8 - Main Frame table 2

The rack is constructed in a way that it can be lifted when the table is lifted, and thereby transported as one unit. The table will be retractable from the shelf. This requires some heavy-duty wheels due to the high weight of the parts and adapter, so it can be possible to retract the table without using a pallet truck or forklift. An example of heavy-duty wheels is shown in Figure 9. A retractable table gives an opportunity to save some space and keep it tidy when the main frame is assembled. This is a part of “Seiso” (“5S”, chapter 4.1, Lean Report).

Figure 9 - Heavy-duty Wheels

The complete main frame table with its components is shown in Figure 10

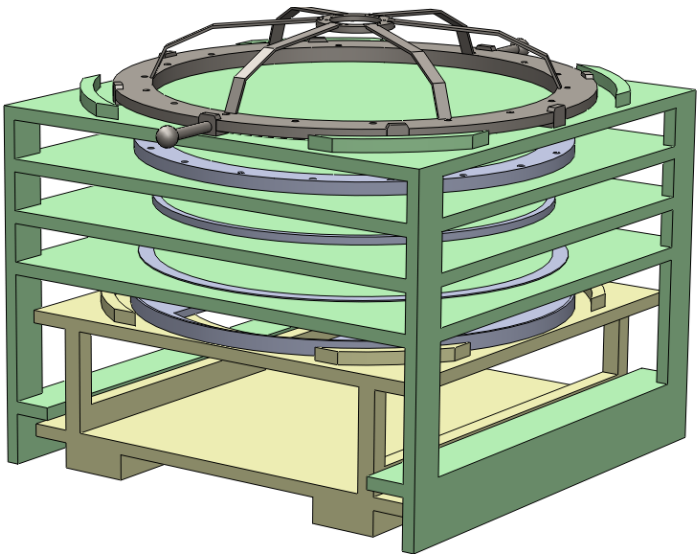

Figure 10 - Main Frame Table 3

© BUC, Kongsberg, Production Technology

Another aspect of this main frame table is to gather all the parts at one place, in a logic system. If these parts and the adaptor are packed in the storage, we will accomplish a lot of advantages:

- **No repacking:** These parts might come into the storage as a batch of similar parts. If the storage personnel unpacks and places similar parts together, someone else needs to systemize and find what they want afterwards, when they are starting on a project (RWS). By gathering the parts that belong together at once, we don't need to do an unnecessary operation.
- **Visible:** If one part is missing, it is easy to see this before starting on a project. It will also be easier for the storage personnel, if they handle a lot of parts at once, to see if they packed everything needed for each project.
- **Labeling:** Each rack can be marked with its project number and description. This reduces the risk for using wrong parts in a project.
- **Logic structure:** The parts will be set in the order of the assembly process, this saves time and will indirectly help the workers, not to put the parts together in the wrong order.
- **Reachable:** When assembling, all the parts will be within a reachable distance; this saves a lot of time and keeps the area tidy.

All these advantages have one common attribute: they all saves the time used on the project, giving a lower circulation rate. This is according to the Lean Report, chapter 6, Lean Strategy.

6.1.2 Main Frame Motor

The two motors for the main frame will be assembled after the main frame is moved from the main frame table, turned around and put on the jig. The motor assembly is not a directly part of the main frame assembly, because it is not done at the main frame table. We will therefore use a regular half-pallet (euro-standard) for the storage and transportation of the motors. This pallet shall be equipped with a plate, cut after the dimensions of the motors, shown in Figure 11. This is a way of making the handling much easier in several ways. For the storage worker, it is impossible to pack wrong or put extra parts on this pallet. The motors will be stable during transportation without the need of time for strapping etc. This will also save time for the assembly worker who can avoid the unstrapping.

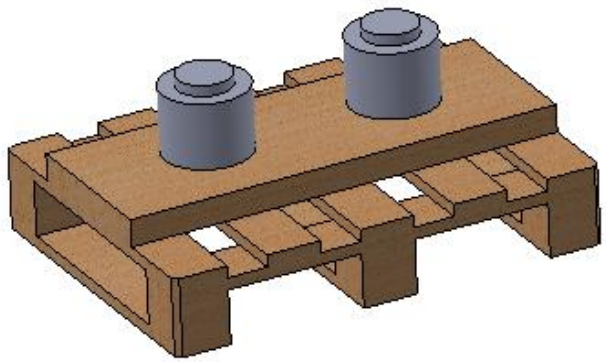

Figure 11 - Main Frame Motor Pallet

6.1.3 Weapon Elevation Assembly

The weapon elevation assembly consists of a small sub assembly with four parts. This is a large cylinder that needs to be mounted on two racks and a weapon cover connected to the cylinder. We will use a standard euro pallet to store and transport the cylinder and the two racks. To make this assembly as easy as possible, the pallet shall be modified with a frame for the cylinder to rest on. This enables us to mount the two racks to the side of the cylinder without having to move it from the pallet. It is also beneficial to gather all the parts for the assembly at one pallet, as shown in Figure 12. The pallet can afterwards be marked with the project number, reducing the risk of failure due to wrong parts.

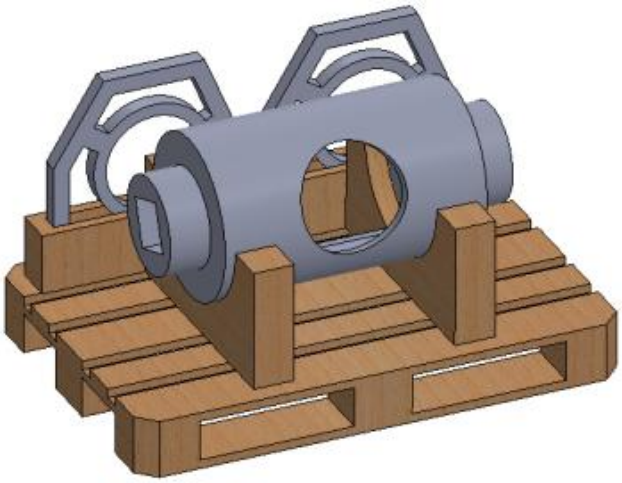

Figure 12 - Weapon Elevation Pallet

The weapon cover is 2850 mm long and will therefore need a separate storage and transportation unit. By using a frame with wheels adjusted for the weapon cover, we will enable both easy handling, when mounting the subassembly and transportation into the production area. We will use a long bundle wagon with wheels, as shown in Figure 13. These can be bought in all sizes and can be adjusted for the product.

Figure 13 - Bundle Wagon

With a bundle wagon, the weapon cover can be easily slipped onto the cylinder in the subassembly. When the subassembly is finished, the whole part can be lifted onto the jig and mounted on the main frame. This is a huge advantage because it will reduce the number of lifting operations of the parts. It will also remove the need for an extra subassembly area. The handling of the parts will also be a lot easier because both the pallet and the frame with wheels can be transported manually without the need for crane or forklift. This requires that the

© BUC, Kongsberg, Production Technology

operation of mounting the weapon cover on ground is possible. Our concept with the weapon cover is shown in Figure 14.

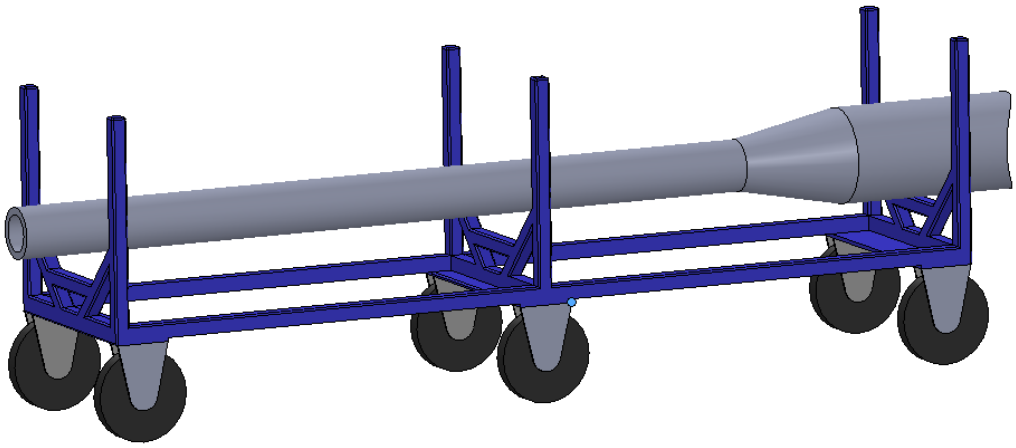

Figure 14 - Weapon Cover Wagon

6.1.4 Elevation Motor

The elevation motor is a small piece that is the next part of the main assembly process. Since it is only one small part, we will use the same principle as in the case of the two motors for the main frame. We will also modify the half pallet with shape that is cut by the dimensions of the motor, for the same reasons as mentioned under “motor for main frame”. The pallet is shown in Figure 15. The part shown in the figure is a slip ring not the elevation motor. We don’t have the proper information of the assembly process due to confidentiality, but we know that the slip ring will be connected at this point, and has therefore chosen to illustrate this.

Figure 15 - Elevation Motor Pallet

This pallet looks a little different from the motor pallet; this is simply because it is made from the principle of a kit box. A kit box is a box with foam inside, which can be cut by the dimensions of the content. A kit box is a simple and cheap way of making a lean storage and transportation unit.

© BUC, Kongsberg, Production Technology

6.1.5 Cover Support

The ballistic protection cover support consists of two main plates which forms the foundation, two bigger brackets and four ribs. These parts will be assembled on the jig and not preassembled as a sub assembly. The only need is therefore a storage and transportation unit. We will use a plate trolley with wheels. These can be bought in all sizes and can be adjusted for the product to be stored / transported. A regular plate trolley is shown in Figure 16.

Figure 16 - Pallet Trolley

With this trolley the workers can easily roll it next to the jig when using the parts for assembly. Another aspect of using a trolley is to gather all the parts related to one step in the assembly process at one spot. The final trolley with its components is shown in Figure 17.

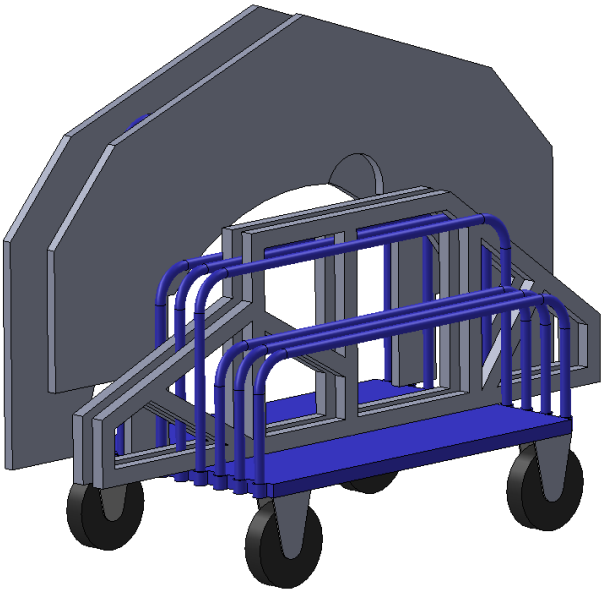

Figure 17 - Pallet Trolley with Components

6.1.6 Electrical boxes

There are a total of twelve electrical boxes in different sizes to be assembled. We will therefore add two shelving units with space for six electrical boxes in each unit. These boxes shall be organized in a logic system, in the order of the assembly. Each shelving unit will consist of three shelves. In each shelf the boxes will be organized starting at the top from the left, then moving to the right. This gives a logic structure which is familiar for the workers since it is the same way as reading. Each box shall also have its designated spot; this is solved by making edges at each spot in the shelving units with the dimensions of the boxes. The part number of the box shall

© BUC, Kongsberg, Production Technology

also be written at each spot. Since there are three MSU boxes and two charger boxes, these will be given different color on the marking as well as different part number to distinguish them from each other. The overall shelving unit will be given the possibility to be marked with a project number, to reduce the risk of taking parts from the wrong project. It will also be given wheels for easy transport. The two shelving units are shown in Figure 18.

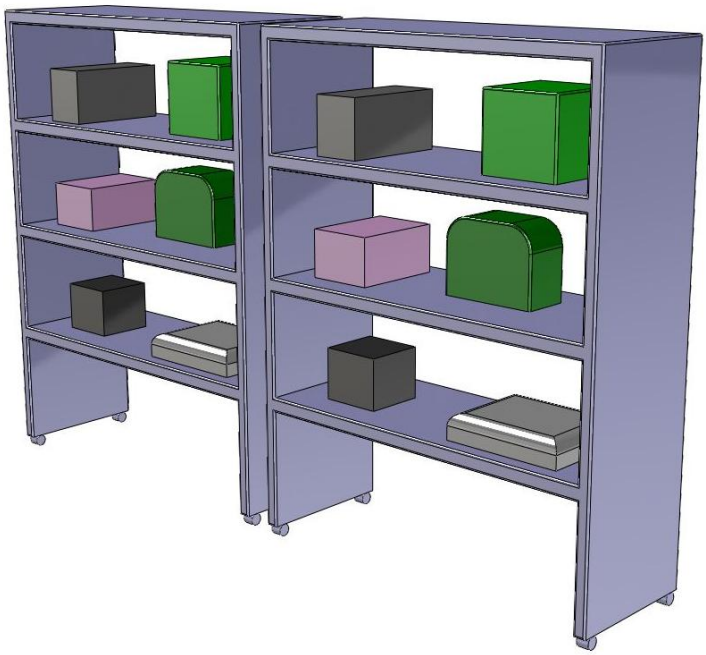

Figure 18 - Shelving Units, Electrical Boxes

Easy transportation by wheels, demand a nearby storage. This shelving unit is not made for forklift transportation or to be rolling on rough surfaces. We don't have proper information about the storage facility in our assignment. However, if the storage is in another building, the shelving unit will be fastened to a permanent spot in the production area. The electrical boxes will be transported in dedicated kit-case, which will be placed in a marked spot in the shelving unit. A kit-case is a regular case with fittings for the right box and used for easy transport into the production area, where it can be put in the right place in the shelving unit.

6.1.7 Cables

There are a total of 64 cables to be connected in the assembly process. This will demand a good system for storage. The main purpose of designing a special cable arrangement is to have a system were the cables are organized in spite of being fairly equally. The cables will be arranged in the order of their assembly. The cable arrangement is constructed much like a coat stand were the cables can be "hanged" over a hook. By adding 64 hooks, each cable can be hanged even if they have different lengths and cross-sections. The cable arrangement is shown in Figure 19.

© BUC, Kongsberg, Production Technology

Figure 19 - Cable Arrangement

The cable arrangement will also have a plate on top, behind the cables were the part number and project number can be written, as shown in Figure 20.

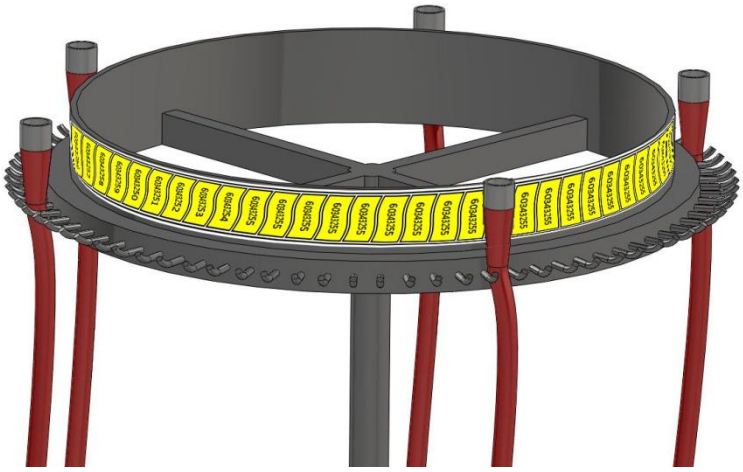

Figure 20 - Cable Arrangement, Zoom

This cable arrangement will save a lot of time for the assembly workers in several ways:

- They don't need to spend time of searching for the right cable when they are about to assemble it.
- They will indirect be guided through the process of assembling the cables without connect some cables to early, which will lead to rework.
- The cable arrangement can be rolled around the jig while doing the assembly process.
- When a cable is missing, it can be discovered and solved at an early stage without delaying the assembly process.

The cable arrangement will have wheels, both for easy transportation into the production area and for rolling around the jig when assembling.

© BUC, Kongsberg, Production Technology

6.1.8 Weapon

The weapon will be lifted and assembled on the jig. The weapon will therefore only be stored and transported before it is assembled on the jig. We will use a bundle wagon with wheels for this operation. These can be bought in all sizes and can be adjusted for the product. Our wagon adjusted for the weapon is shown in Figure 21. The wagon can also easily be moved around when attaching the crane for lifting.

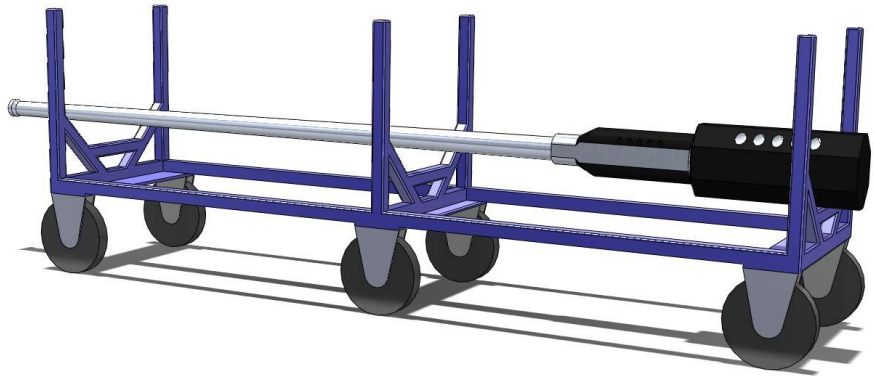

Figure 21 - Weapon Wagon

6.1.9 Ammunition box

There are two ammunition boxes to be assembled at each side of the jig. These can be lifted on to the jig, and shall be mounted to the frame as a part of the assembly process. Since there is no subassembly, these ammunition boxes will only be stored and transported on standard half-sized euro pallets. As mentioned earlier, this pallet shall have cuttings by the dimension of the ammunition boxes. The pallet can be seen in Figure 22.

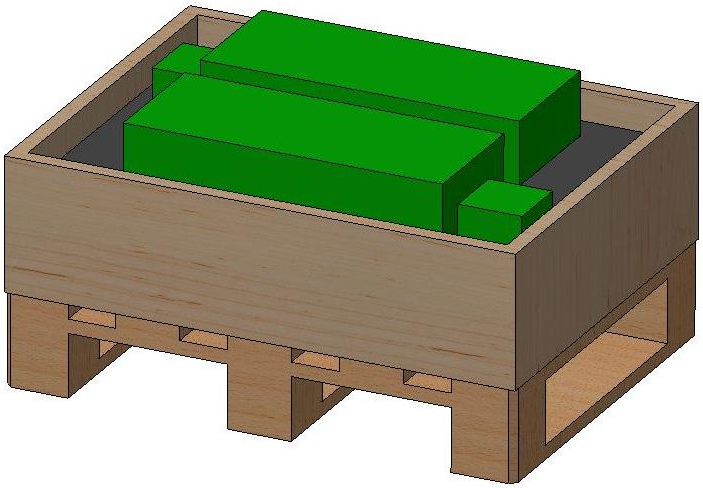

Figure 22 - Ammunition Box

6.1.10 Sensor Unit

The sensor unit consists of a package containing different sensors. There will also be a suspension unit for the assembly of the sensor. These two parts are preassembled from a supplier, and will most likely be delivered in a special kit box. The most reasonable solution is therefore to make a pallet spot for this kit box so it can be transported directly into the production area without any handling or repacking. Part number and project number will verify

© BUC, Kongsberg, Production Technology

that the right sensor unit is placed at the assembly spot. An example of how this kit box could look like is shown in Figure 23.

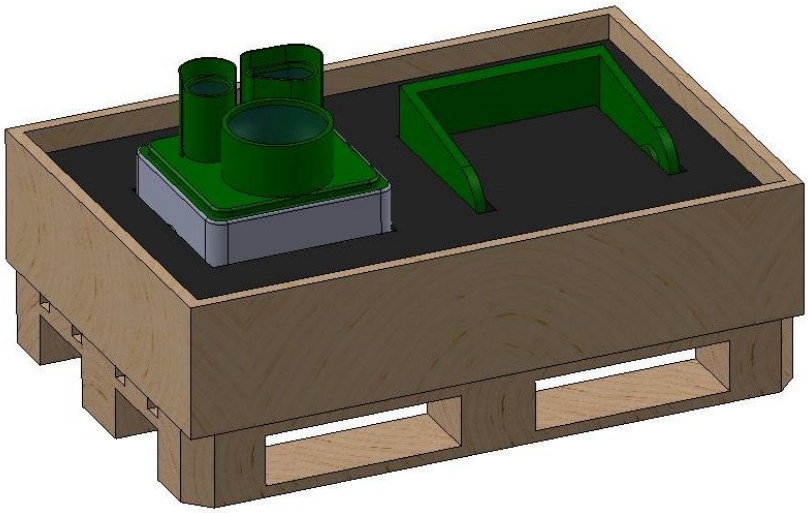

Figure 23 - Sensor Unit Kit

6.2 Pallet Transportation

There is a possibility to buy a trolley with wheels for the transportation of pallets. This is to reduce the need for forklift or pallet truck when transporting the pallets into the production area. It will also make it easier to move the pallet around in the production area when assembling the parts on it, for example when connecting the crane to the parts. Another aspect is the height; it is more convenient to lift the pallet above to ground when working on them. This will however not be convenient for the storage workers, if it demands the use of lifting equipment when handling. It will then just increase the time spent on not value adding activities. Our project is limited to the production area, and we do not know for certain how the parts will arrive, we can therefore not conclude whether it is a good solution or not. An example of this trolley is shown in Figure 24.

Figure 24 - Pallet Trolley

6.3 Layout

Since there is a great amount of parts to be assembled, there is no room for all the parts in the assembly area at once. A principle of lean manufacturing is to have a u-shaped cell, where you are working yourself around the cell in a clockwise or counterclockwise direction when assembling ("One Piece Flow", chapter 4.8, Lean Report). It is not a good solution to move backwards, you shall always move in one direction, and the previous tasks shall be finished [3].The reason for this is to maintain a systemized overview and reduce the risk for failure and rework. Because of the large quantum of parts, we need to do two "rounds" in the cell. This means that the parts will be placed at designated spots after removing the empty containers from the first round. Figure 25 gives an overview of the first round in the assembly process. As seen in the figure, each part or subassembly will have their designated spot. The parts are put in the right order of the assembly process, by moving clockwise in the figure, starting from the main frame table. A crowded area leads to ineffectiveness therefore the cell will be spacious, making room for the assembly process ("5S", chapter 4.1, Lean Report). It is also important that the cell is not too spacious because this will lead to accumulation of parts or equipment that doesn't belong in the respective area [3].

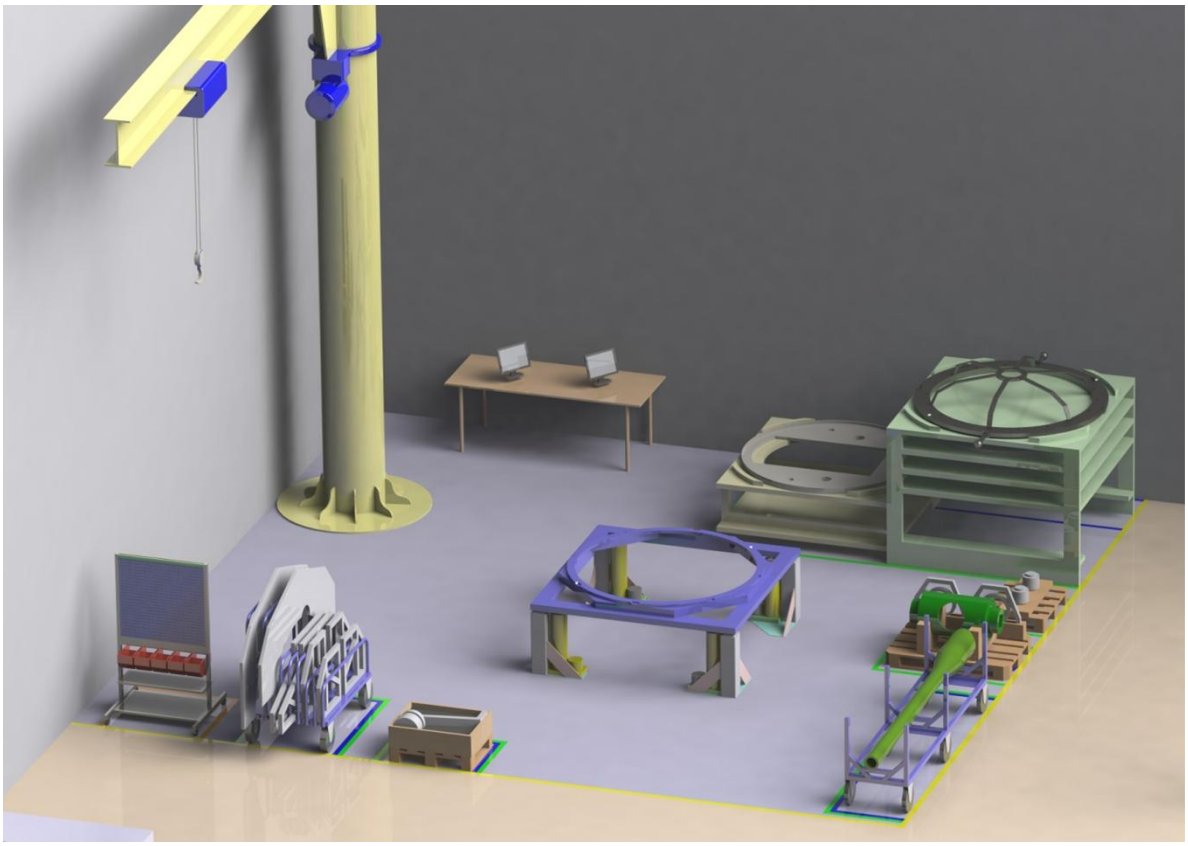

Figure 25 - Assembly Layout, First Round

Figure 26 shows the second round of the assembly process. This layout is made out of the same principals as the first round: logic structures were you are guided through the assembly process by moving in a loop, or a u-shape.

© BUC, Kongsberg, Production Technology

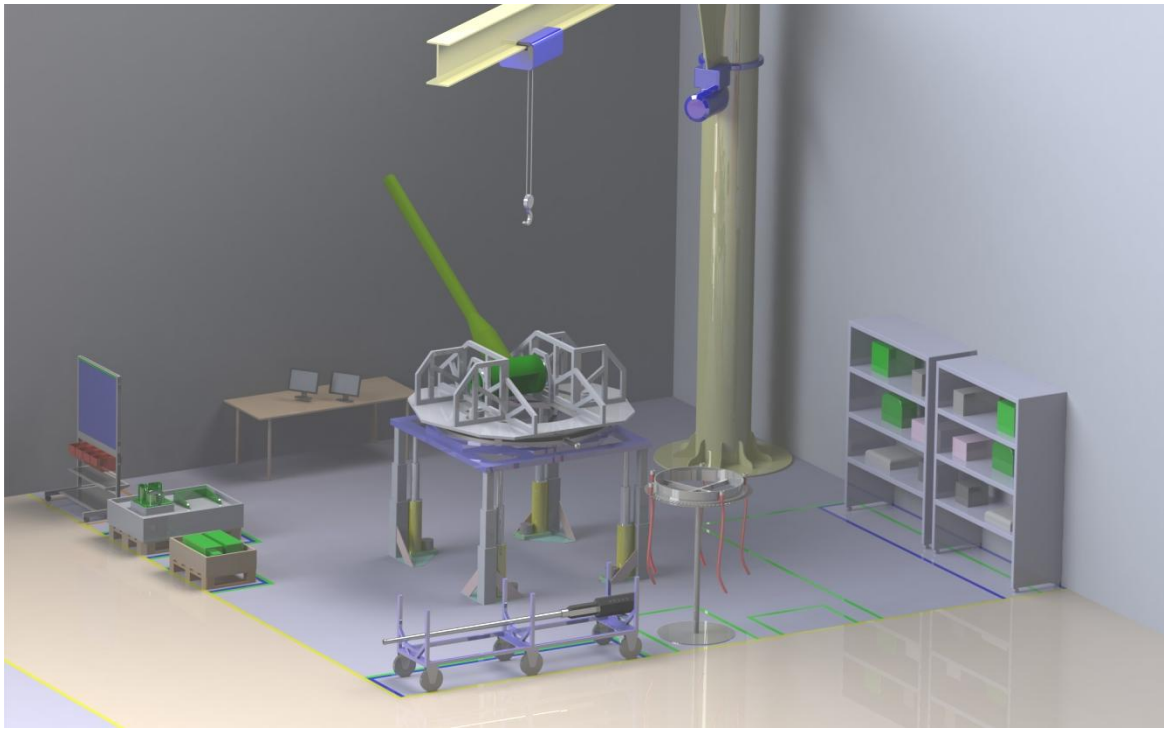

Figure 26 - Assembly Layout, Second Round

The area shown in Figure 26 is the other assembly station, used for the production of five units per week. As we can see, the direction is also clockwise. The second assembly station will therefore not be a mirror image of the first assembly station, due to the layout in the facility. It might sound like non lean strategy to not have two identical stations, but the logic system by moving clockwise speaks in favor of having completely identical cells. It feels more natural for a human to move and work in a clockwise direction, and will therefore lead to higher efficiency. The spots will of course be placed in the same order; it will only result in two different layouts seen from above, as in Figure 27. In other words, the cell will feel absolutely the same for the workers.

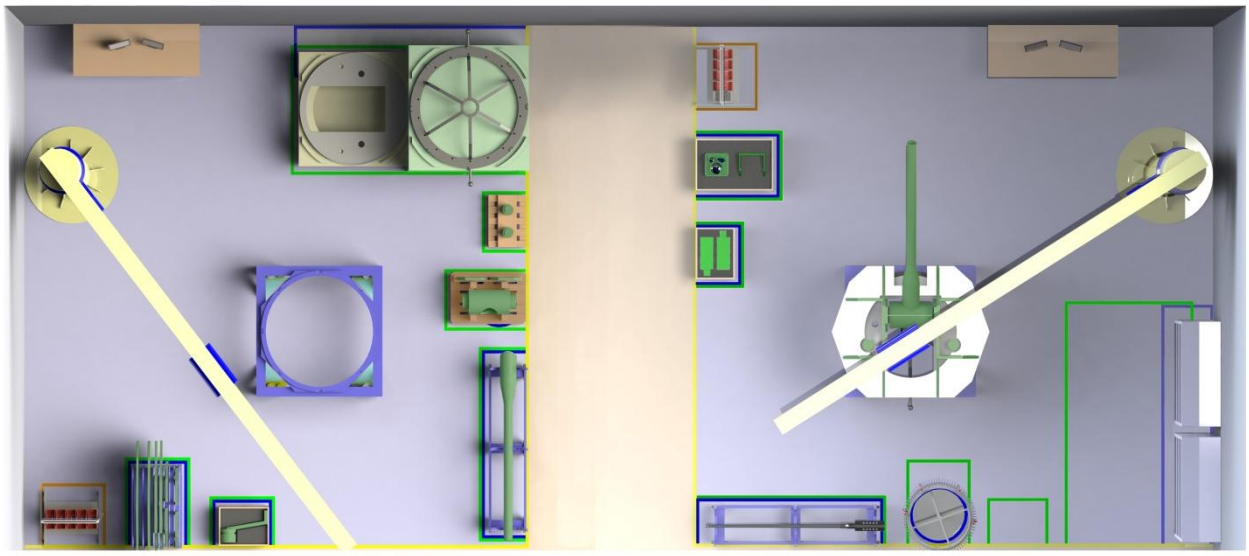

Figure 27 - Assembly Layout, Above Both

© BUC, Kongsberg, Production Technology

To avoid any confusion, the contour of each element described above will be marked on the floor, as seen in Figure 28.

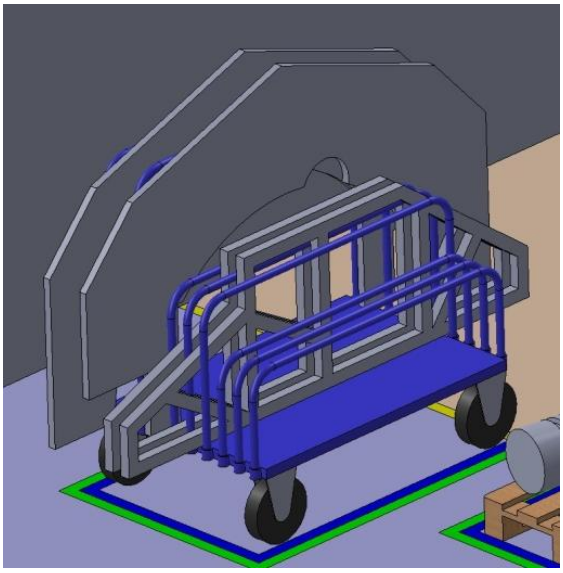

Figure 28 - Marking

A marking on the floor avoids accumulation of parts or equipment that doesn't belong in the area, and it will become more visible for all personnel when something is misplaced. There will be separate color defining the first and second round. The first round is marked in green and the second will be marked in blue. The content shall also be written on the floor, with the given number according to Table 11. The spot for the tool cabinet (at the assembly stations) is marked in orange. This is seen in Figure 29.

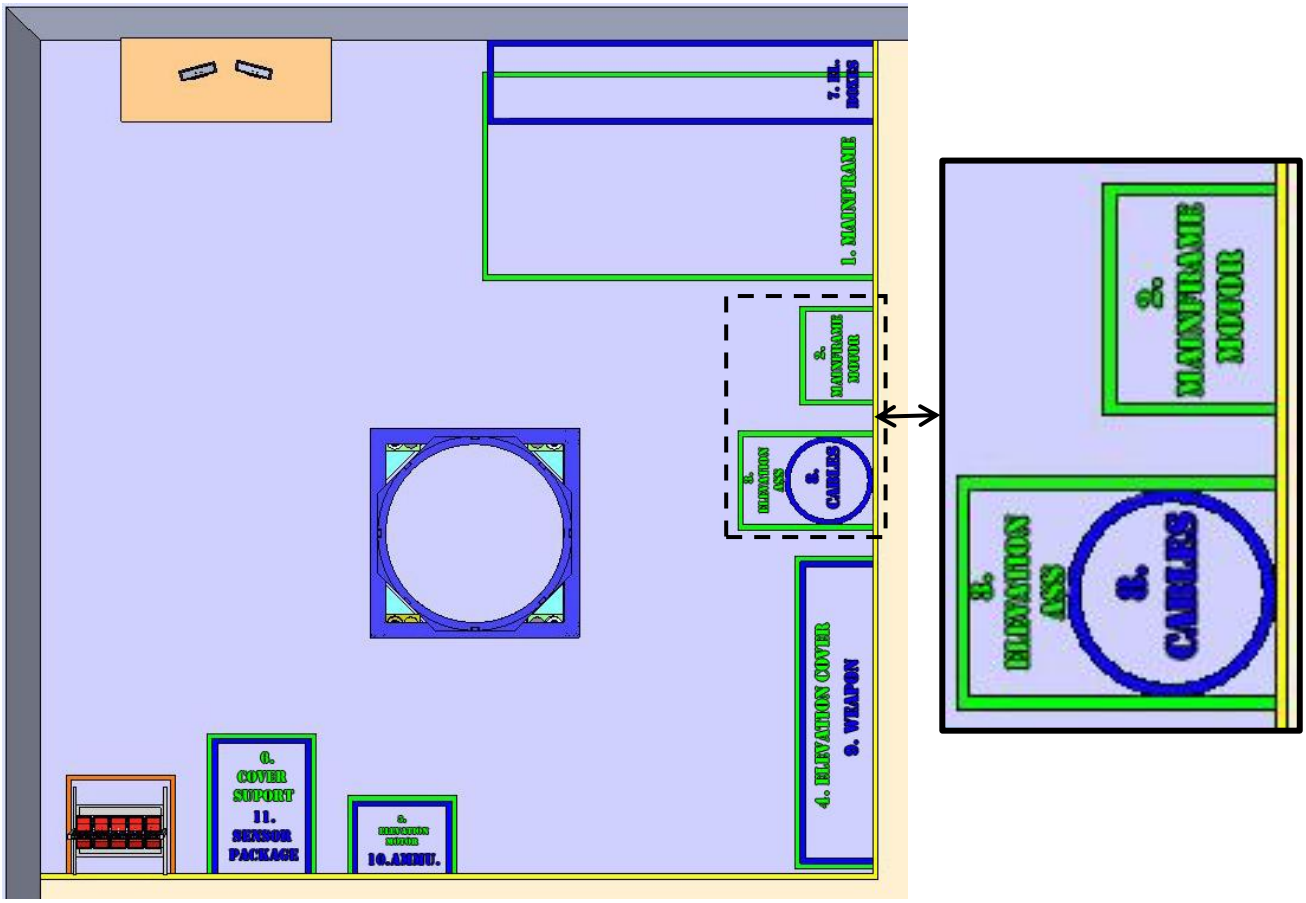

Figure 29 - Assembly Layout, Marking with Detail

6.4 KPI – Key Performance Indicator

A performance indicator or key performance indicator is used to measure key parameters. The key parameters are defined by the goal of the business. Since our goal is lean manufacturing, and thereby shorter circulation rate, the key parameter will be measurement connected to the achievement of short circulation rate. By constantly measure the progress, delays can be detected at an early stage, avoiding lag in the production. In the assembly area it is important to keep progress; delays will affect the rest of the production. The assembly process has a total of 18 effective hours, and will be executed within two workdays for our two cases, five per week and one per week. As described in chapter 6.3, the u-shaped cell is split into two turns by dividing the process in two equal laps. There is a possibility to measure halfway into the assembly process whether the process is on track or not, but this measurement is not as frequently as desirable. We will therefore add extra measurements. The time used for each operation shall be marked on the floor in a line with arrows making up the assembly process. By time, we are talking about time comparable to a stop watch hanging in the assembly area. The time will not consider scheduled breaks, meetings etc. The first line is marked in green, and the line for the second round will be marked in blue. The lines are shown in Figure 30.

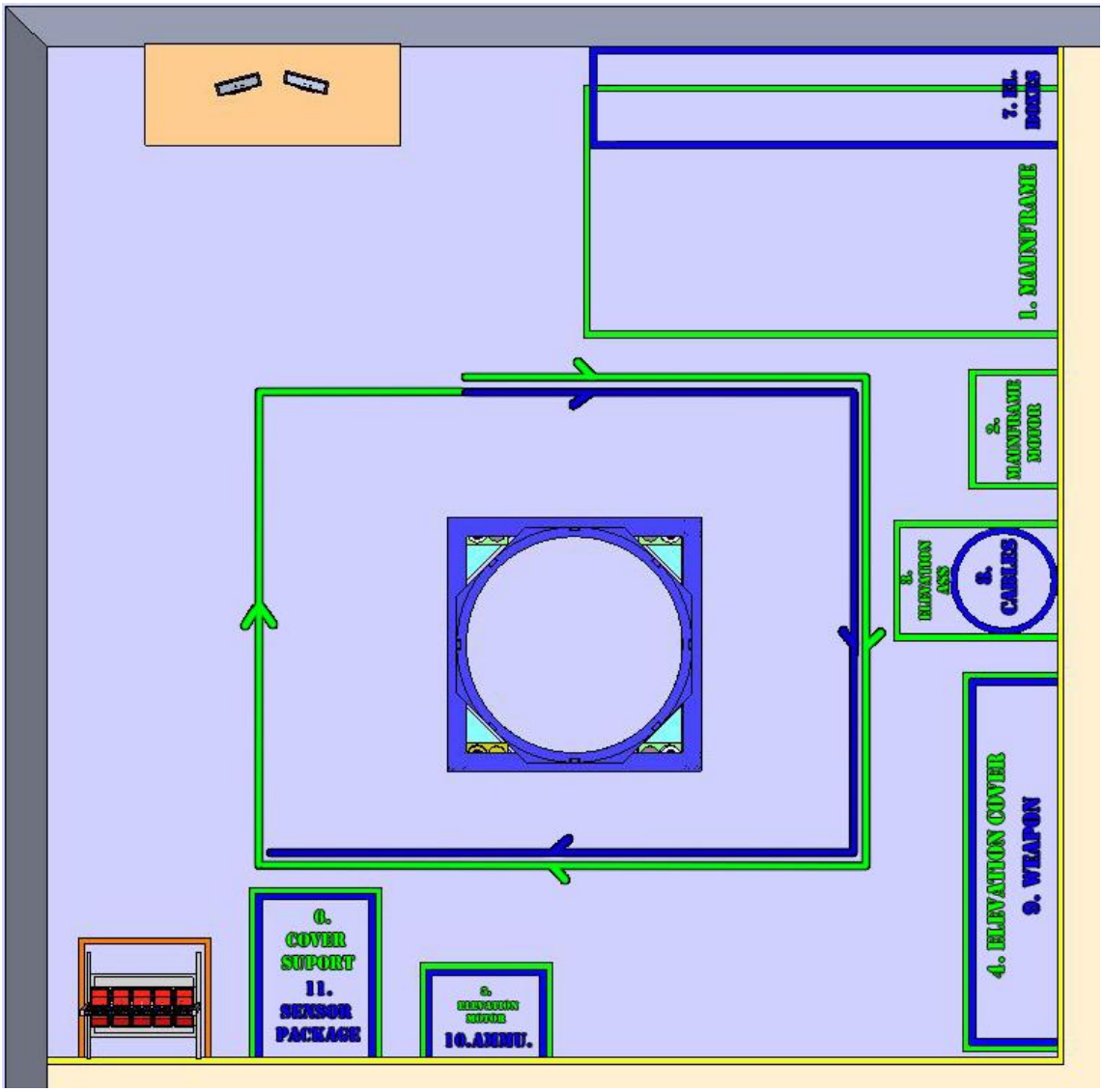

Figure 30 - Assembly Layout with KPI-lines

6.5 Conclusion

All the chapters above can be summarized in a more productive assembly station, with a lean strategy. Some general advantages by choosing the described layout will be highlighted:

- **No repacking:** The parts might come in as a batch with other similar parts into the storage. If the storage personnel unpacks and places similar parts together, someone else needs to systemize and find what they want afterwards, when they are starting on a project (RWS). By gathering the parts that belong together at once, we don't need to do an unnecessary operation.
- **Easy handling:** The parts will be placed in a container (e.g. kit box) to eliminate the time spent on strapping / unstrapping.
- **Visible:** If one part is missing, it is easy to see this before starting on a project. It will also be easier for the storage personnel, if they handle a lot of parts at once, to see if they packed everything needed to each project.
- **Labeling:** Each rack can be marked with its project number and description. This reduces the risk for using wrong parts in a project.
- **Logic structure:** The parts will be set in the order of the assembly process; this saves time and will indirect help the workers to not put the parts together in the wrong order.
- **Reachable:** When assembling, all the parts will be within a reachable position; this saves a lot of time and keeps the area tidy.
- **Movement:** The units will be equipped for the most convenient method of movement. By reducing the time spent on forklift and crane, the non-value adding time will be decreased, due to easier handling and thereby shorter handling time.
- **Subassembly structure:** Each subassembly unit will be equipped with the most convenient assembly structure. This reduces the time spent on unnecessary or cumbersome operations.
- **Layout structure:** The overall layout is logic and the steps of the assembly process are gone through one by one, clockwise, where each part or subassembly has its designated spot.
- **KPI:** The floor will be equipped with key performance indicators for continuously measurement of the progress, delays will be found in an early stage.

All the highlighted bullet points above will lead to a lean layout where the 7 wastes are reduced ("Lean Tools", chapter 4.0, Lean Report).

All these changes will lead to decrease in the assembly time. We do however not have detailed information about the production methods and the background of our given production times. We can therefore not go more in detail about the "saved" time after implementing our lean layout. The following chapters is therefore based on our given production time of 18 effective hours.

© BUC, Kongsberg, Production Technology

7 Test Station

The test stations will not consist of a lot of operations, but the operations, that will take place at the test stations, are shown in Table 12.

Table 12 - Processes of Testing

Elements	Time
IHT (in house test)	6h
Protection cover	2h
FAT(factory acceptance test)	10h

Content:
The test stations will include a table with a computer and a control grip for testing of the RWS, in addition to a jig. The control is the same type as the one used when the product is in daily operation. As described in chapter 10.5 the test stations have fences separating the safety zone from the facility due to dangerous testing procedures. The operational table is therefore placed outside the safety zone.

Test equipment shall always be available, and easy to locate (requirement K03.11). If any fault is found and troubleshooting is needed, there will be necessary with some extra equipment. In such case, there will be necessary with a mobile table with a laptop for closer failure search. This is not according to a lean strategy, as we will describe in more detailed in chapter 8. KPS will however use this mobile table for shorter failure operations to avoid movement of the RWS. The dimension, cost or function of this equipment is not provided, there is however modeled a post in the layout where such equipment can be placed, as seen in Figure 31.

© BUC, Kongsberg, Production Technology

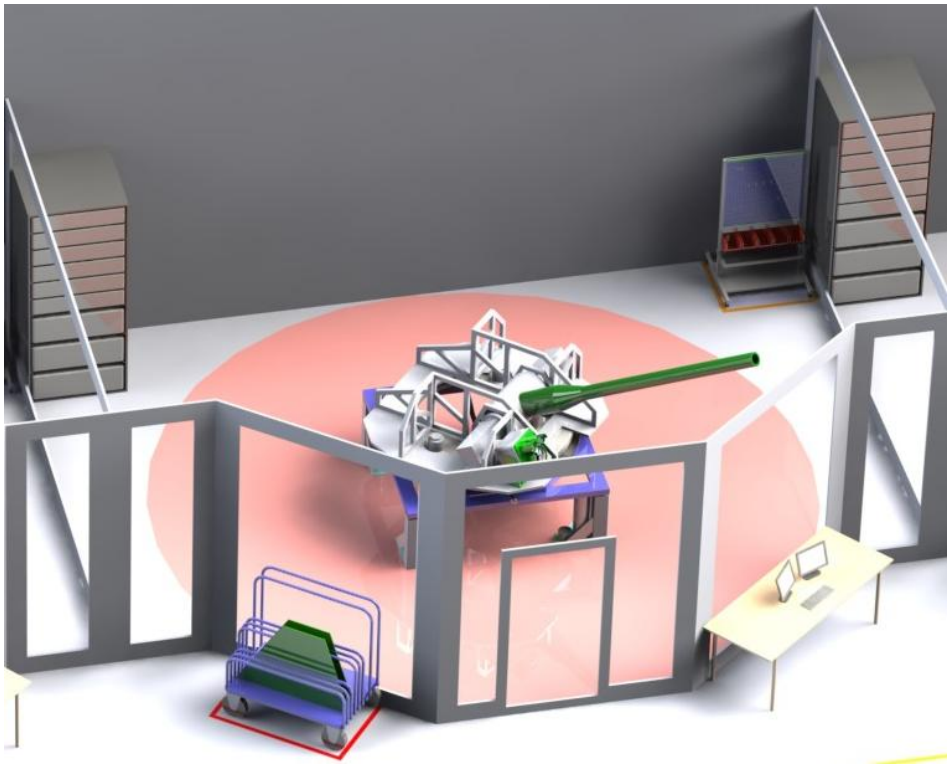

Figure 31 - Test Station

Protection Cover Assembly:

Beside the test procedure, there will be a short process were the protection cover will be assembled. This process is performed after the in house test (IHT) and before the factory acceptance test (FAT). To eliminate unnecessary transportation of the product ("Lean Tools", chapter 4.0, Lean Report), this short process will take place at the test jig before the FAT is performed. Due to this assembly process there will be a need of a tool cabinet and a spot for the parts to be stored. The tool cabinet is described in chapter 10.1, and is placed inside the test area at a designated spot.

The protection cover consists of several plates to be connected to the protection cover support. These parts will be assembled on the jig and not preassembled as a sub assembly. The only need is therefore a storage and transportation unit. We will use a plate trolley with wheels. These can be bought in all sizes and can be adjusted for the product to be stored / transported. A regular plate trolley is shown in Figure 32.

Figure 32 - Pallet Trolley

© BUC, Kongsberg, Production Technology

With this trolley the workers can easily roll it next to the jig when using the parts in the assembly. Another aspect of using a trolley is to gather all the parts related to one operation of the assembly process in one spot. The final trolley with its protection cover components is shown in Figure 33.

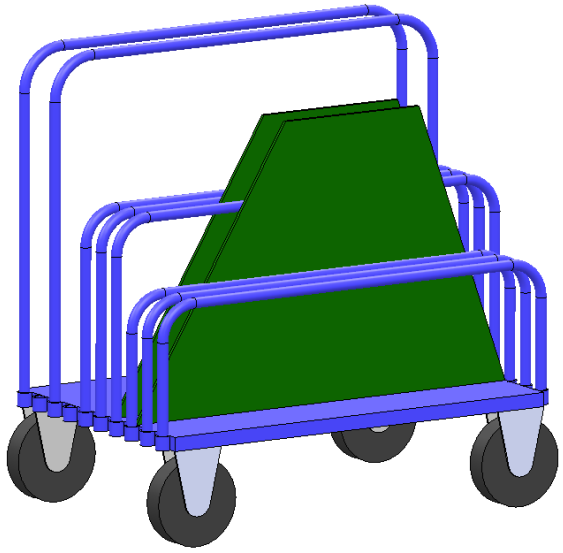

Figure 33 - Pallet Trolley with Protection Cover Components

The trolley is placed outside the safety area, for easier handling of the store workers, while testing.

Marking:

A marking on the floor avoids accumulation of parts or equipment that doesn't belong in the area, and it will become more visible for all personnel when something is misplaced. There will be separate color defining the spot for the tool cabinet and the pallet trolley. The content is also written on the spot. The spot for the tool cabinet in the test area is marked in yellow and the spot for the pallet trolley is marked in red. This is shown in Figure 31.

© BUC, Kongsberg, Production Technology

8 Backup Station

There will not be any direct operations at the backup station. The backup station's only purpose is to handle delays in the production flow. If one unit is delayed due to lack of parts or failure after testing, the product will be taken out of the "production line" and put on this backup jig. If the product comes to a stop at the test jig, while waiting for new parts for example, the whole production will stop completely. According to this KPS wanted a backup area with a jig for both testing and assembling (requirement K03.17).

A backup jig is not according to lean strategy. The reason for this, despite the ability of preventing accumulation in the production line, is because accumulation shall not occur at all. A lean strategy would work towards a goal of zero down-time. In other words, the focus would be on why these failures occur and how to eliminate them, not just how to solve the problem when it occurs.

At the backup station there will be a demand of both the equipment from the assembly station and the test station. It will therefore be a demand for a tool cabinet, as described in chapter 10.1 and the regular test equipment. The regular test equipment will be a table with a computer and a control grip. It will also be a need for a mobile table with different test equipment, as described in chapter 7. As a requirement from KPS (requirement K03.22), the backup station will need extra test equipment. The dimension, cost or function of this equipment is not provided. Our thesis will therefore not go more in detail about this, but as seen in Figure 34, we have calculated with extra space on the floor in the backup area for this equipment.

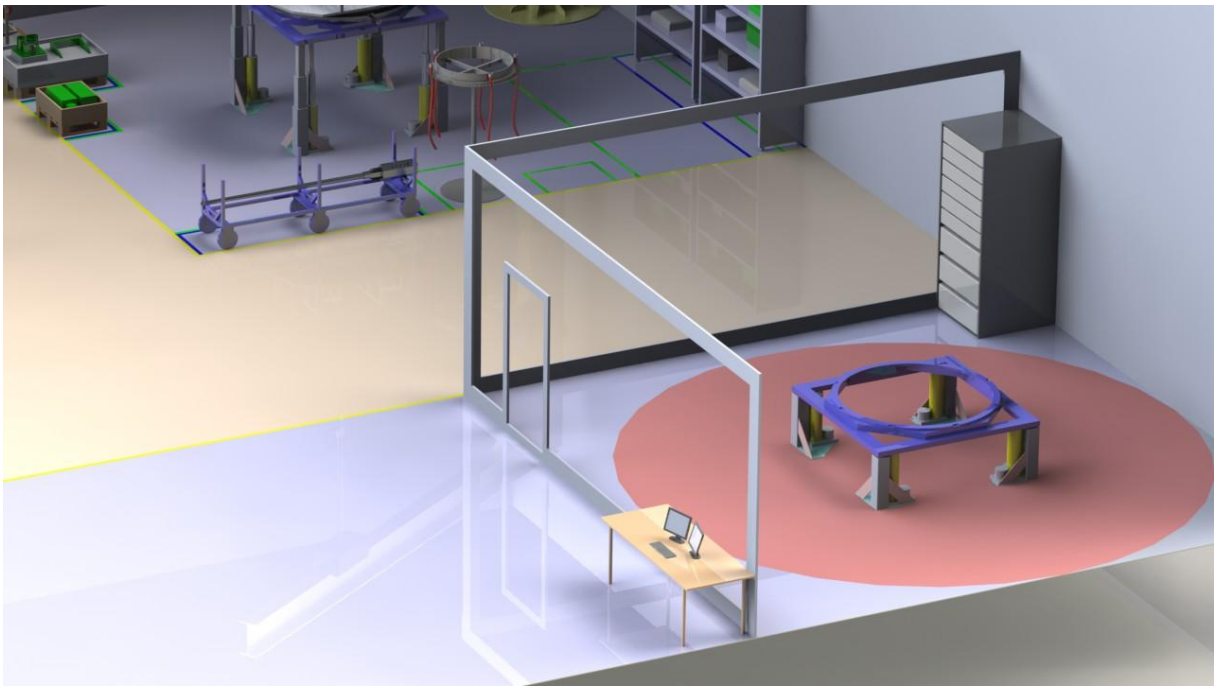

Figure 34 - Backup station

© BUC, Kongsberg, Production Technology

9 Packing Station

The packing station is not directly part of our assignment, but the time for packing and inspection is taken into account in the chapter Human Resources. Both packing and inspection will take place at this station. Directly what the inspection and packing procedure consists of is not provided. We do however know that the bottom cover will be sent beside the RWS, as described in chapter 4.1, “Adapter with Lock System” in the Jig Report. The adaptor can be sent as a part of the product for easy clamping to a transportation unit, this will also protect the product while shipping. On the other hand, this will demand an extra transportation of the adapter back to the facility. This transportation is not connected to a single product and will not increase the circulation rate. According to a lean strategy, we will strive to reduce all non-value adding activities as much as possible (“Value Stream Mapping”, Chapter 4.7, Lean report). Two possible solutions might be:

- Lower the cost of the adapter so it can be used as a packing unit, and not sent back to the facility afterwards. The costumer will probably not pay for this extra cost.
- Develop a packing fixture / box where the adaptor can be easily removed while the product is packed. This alternative might be more time consuming and will therefore increase the circulation rate.

Due to lack of information about this operation, we cannot go deeper into the development. The layout will however have a designated packing spot, with an estimated need of area, as shown in Figure 4 and Figure 5.

© BUC, Kongsberg, Production Technology

10 Overall

Beside the previous mentioned inventory in the facility, it is a need of pre-mounted compressed air hoses. These hoses are placed along the jig and at spots near the subassemblies. The workers can thereby connect the pressurized torque wrench at the spot where they are, without long cables.

Further chapters will discuss elements that are general for the overall area. The overall layout for the case of producing five units per week (Case 1) is shown in Figure 35 and Figure 36.

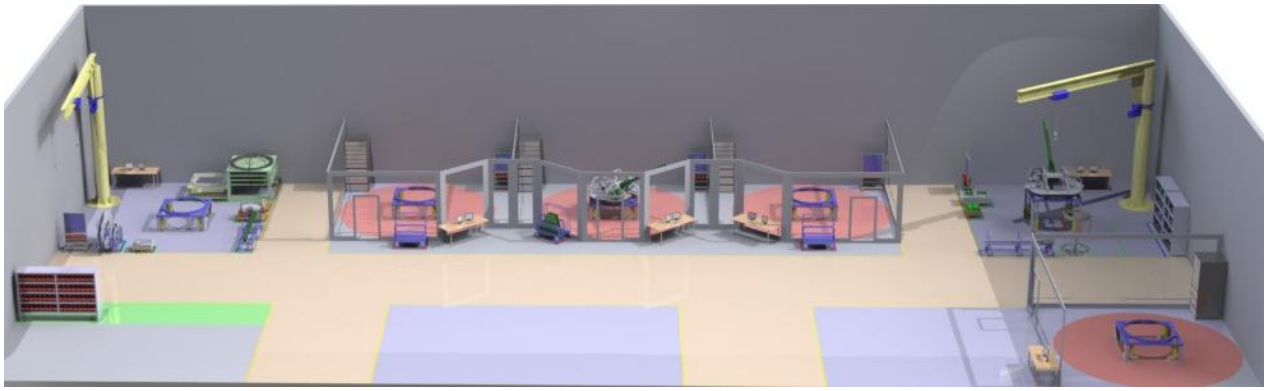

Figure 35 - Overall Layout 2, Case 1

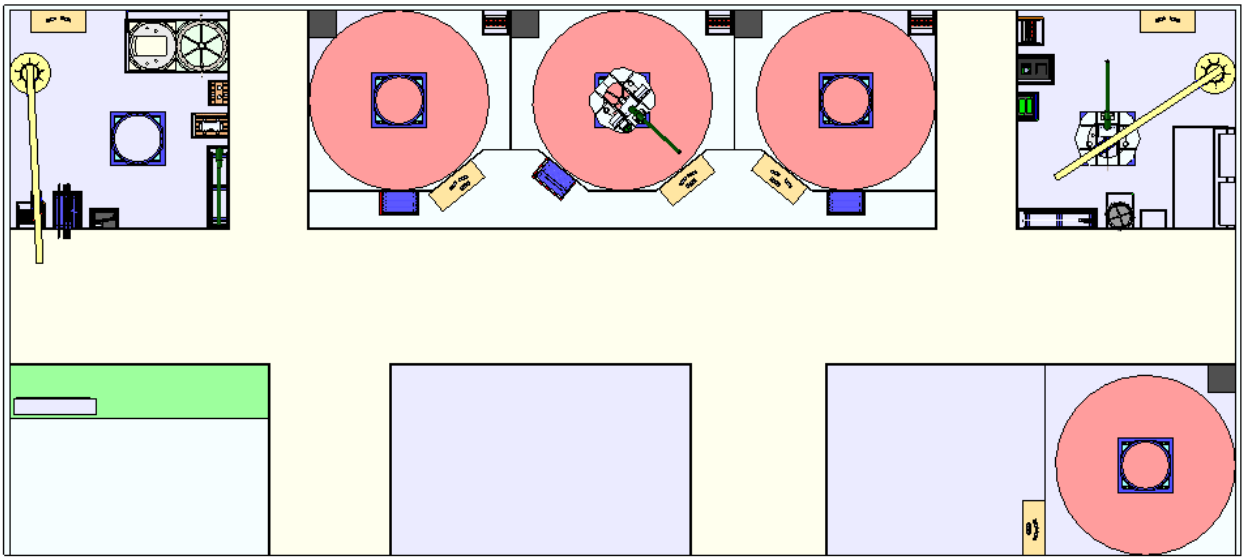

Figure 36 - Overall Layout 3, Case 1

10.1 Tools

To accomplish a lean working environment, it is important to have tidy an organized work area with nothing that is not needed ("5S", Chapter 4.1, Lean Report). This is why we have looked further into the tools that will be placed in the area.

The Lean way to organize the tools is to relate the tools to a specific operation. This means that if you need to use the wrench three times during the assembly, you will have three wrenches located in close distance of where the operation is executed.

© BUC, Kongsberg, Production Technology

These tools will not be advanced tools that can perform several operations, but simple tools specialized to perform a specific task. This lowers the cost of the tool and you can by several equal tools perform similar tasks later in the assembly.

The jig is probably the place that is most suited to place these tools, because it is placed in the middle of the production area and the tools can be placed on each of the sides of the jig. This means that the worker only has to turn around to reach the tool he needs for the task he is about to perform. The tools can also be placed on the pallet or shelf which the parts are stored.

To find a good solution for where to put the tools and what tools are needed, you have to know every little operation and bolt that is being mounted on the product and in which order. This is information that is not available at this moment and makes us unable to go into detail in this subject.

Because of the limited information of the specific operations and the tools that are needed to execute them, we have decided to use a mobile tool cabinet that the workers can move around the product as they assemble it. This is not the best solution for this kind of production but due to the lack of information we have concluded that this is solution that can be defended in a Lean production.

Since this is a Lean production, it might be easy to believe that using two tool cabinets will decrease the production time by minimize the time spent retrieving tools. This is not the reality, because then you will have twice the tools you need to perform the assembly and the workers will have to go back to the same tool cabinet to put the tool back on its designated place. In worst case they won't bother to walk back to the original tool cabinet but place the tool at the one that is closest.

This is why we will have one tool cabinet that include all the necessary tools for the assembly and nothing more as a part of Seiri ("5S", chapter 4.1, Lean Report) which also recover (requirement K03.10). For example if you need a set of torque wrench bits, there will only be the bits that fits the specific bolts for this assembly. The other bits will be removed and if there are several equal operations that can be performed at the same time, there will be two sets of bits and two wrenches that can be used simultaneously.

The tool cabinet will be of a size of around 1.5 meters high, with a wall at the top that has pre-mounted hooks. At the wall, each tool will be marked at its place, so the workers will know at all-time where to hang the tools. The tool cabinet will only be filled with the necessary work tools; thereby we can hold the total weight low.

When designing the tool cabinets, we can use some of the principles from the lean tool 5S. The tidiness of the tool cabinet will have a great impact on the production rate; time spent on looking for equipment is just waste of time. Even if we know we got the right tools, and don't need to run through the whole facility to find it, it is time consuming to find a tool in a messy tray. We will therefore hang all the hand tools (referred to as wall mounted tools) at the wall of the tool cabinet were it is easy to find and can be put in a system. We also want to mark the background of the wall after the shape of the tool. This will result in a fool-proof system where it is impossible to put the tool in the wrong place; it will also be very visible if there is missing a tool. This can be seen in the illustration of the tool cabinet in Figure 37.

© BUC, Kongsberg, Production Technology

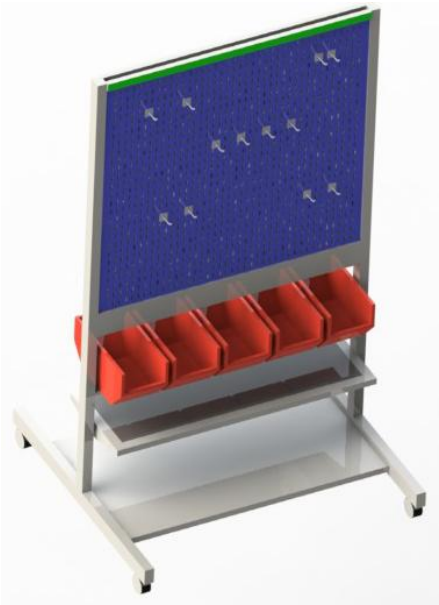

Figure 37 - Tool Cabinet

The tools will also be marked by which cabinet it belongs to. If each set of tools is marked, it will be a lot easier to know where it belongs if it is astray. For marking of the wall mounted tools we will use colored tape, attached to the bottom of each tool. The tool cabinets shall also be painted in the same color, to match the color of the tools.

Beneath the shelf it shall be smaller extractable drawers for bolts, screws, nuts, slices etc. These drawers are a part of the IPS system, which is explained in more detail in chapter 10.4.

10.2 Cranes / Element Transport

In the production facility there will be a lot of heavy parts that needs to be lifted and moved from one place to another. The lifting will be too heavy for a person to handle, so it will be necessary with lifting equipment that can perform these heavy lifts. There will be several types of transportation units. In this chapter we will determine what type of units that's necessary in the production facility and explaining their functions and limitations.

Cranes:
In the production hall there will mainly be two different types of cranes that will handle all the lifting procedures, where both cranes will be used independently from each other. One criterion is that both the cranes need to be in range of the jig for carrying out handling operations (requirement K03.21), the two main types are:

1. Traveling crane which will be used for lifting the complete product of the production jig and on to the testing jig and all the heaviest lifts. This Travers crane runs on tracks that are mounted in the top of the two longest walls, with a transverse beam hanging over them. This transverse beam has a crane that can do lifting procedures in the whole building. It needs a minimum lifting capacity of 5000 kg (requirement K03.6).
2. At each assembly stations there will be placed a smaller swing crane, which will take care of all the smaller lifts, where the traverse crane isn't necessary. This crane is used for lifting the different parts that shall be mounted on the product, which is too heavy

for a person to lift by hand. The swing crane will be mounted on the floor in a corner of the assembly station. The crane must have a lifting capacity of at least 1000 kg. An illustration of this crane is shown in Figure 38.

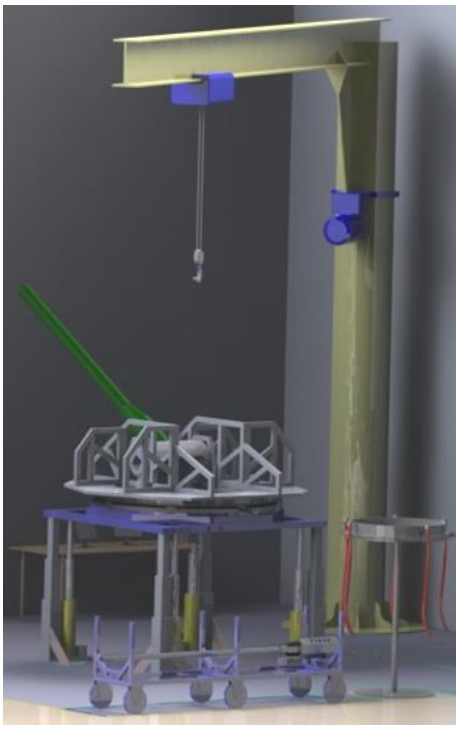

Figure 38 - Swing Crane

Information about these cranes can be seen in Table 13.

Table 13 - Cranes

Type:	Max Capacity:	Length:	Price:	Example:
Swing crane	1000 kg	7 m	NOK 100.000 [7]	
Traverse	5000 kg	20 m	NOK 170.000 [7]	

10.3 One Point Lesson

A common method of sharing knowledge within an organization is by handling knowledge from one individual to another. This will in turn lead to poor information due to oblivion, personal opinions, etc. In the same way a story will always change by the person who is telling it. The variation from this type of training can result in confusion, longer cycle times, rework, and defects.

To ensure a better set of teaching, a lean tool named “One Point Lesson” or “Single Point Lesson” can be implemented. This is the method for right teaching, leading to knowledge and skills necessary for autonomous maintenance. These lessons will be placed at the point of need, because teaching occurs when an opportunity for learning is presented.

© BUC, Kongsberg, Production Technology

There are some basic characteristics with these lessons:

- Communicate a single idea.
- Visual (pictures, diagrams etc.).
- Only one page, and focused.
- Generated at the point of need.
- Self-initiated and self-thought.

OPL will never replace work instructions or procedures within regular operation but they will simplify and improve other tasks. An important part of OPL is that everyone can make one, it does not take long time and thereby everyone can share their ideas. The OPL will ensure that everyone knows a better way of doing something. The next time a problem occur everyone knows the solution. [4]

These lessons will be implemented in the production layout, and the opportunity for making new OPL shall be encouraged. The amount of lessons will increase by time, but at the very start there will be some OPL, for example for crane, main frame table, test equipment etc.

An example of a typical one point lesson, with extra description for its purpose is shown in Figure 39. This lesson is obtained from Fuss & O'Neill Manufacturing Solutions LLC. Other examples can be found in appendix F01 – F10 published by Fuss & O'Neill.

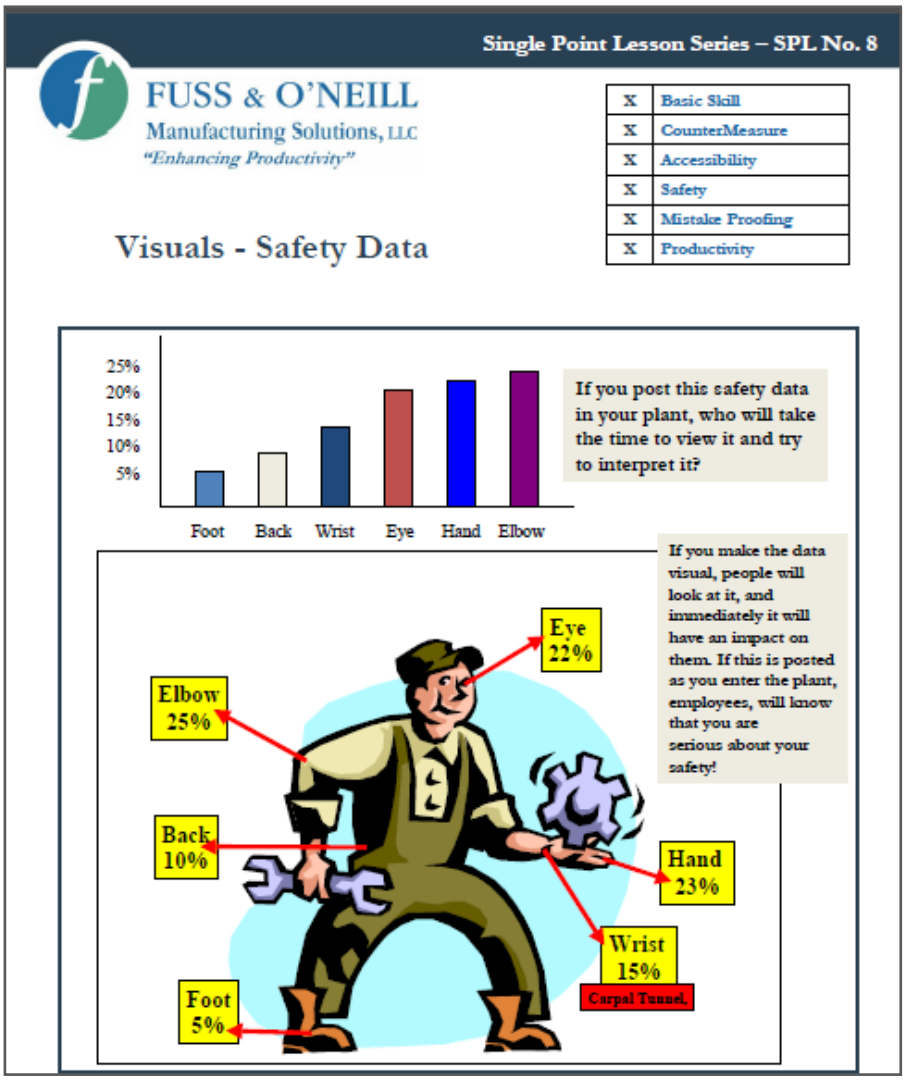

Figure 39 - One Point Lesson [5]

10.4 IPS - Shelving Unit

In the assembly area there is also a need for a storage unit for common used components like bolts, screws, nuts etc. As mentioned in the chapter about tools, the most efficient way to store these components would be to relate every screw and nut to a specific operation. By doing this you would eliminate the waste of having a large stock of screws and the screws could be stored at the same place as the parts they are going to hold together. To accomplish this we would need a deeper insight in the specific operations to be performed. In reality there are too many equal bolts in an assembly like this to keep up with this system in a satisfying way. The parts are small and easy to lose and they might be faulty. It would be very time consuming to retrieve new bolts or screws every time this happens. That is why we have chosen to use an IPS system.

IPS System:
The IPS shelving unit is a common lean strategy system. The unit is just for storage of common components of the assembly process. Common components are components which are reasonable to store in bulk, namely: bolts, screws, nuts etc. These components will be stored at one designated rack, called flow rack, in the work cell. This rack is shown in Figure 40.

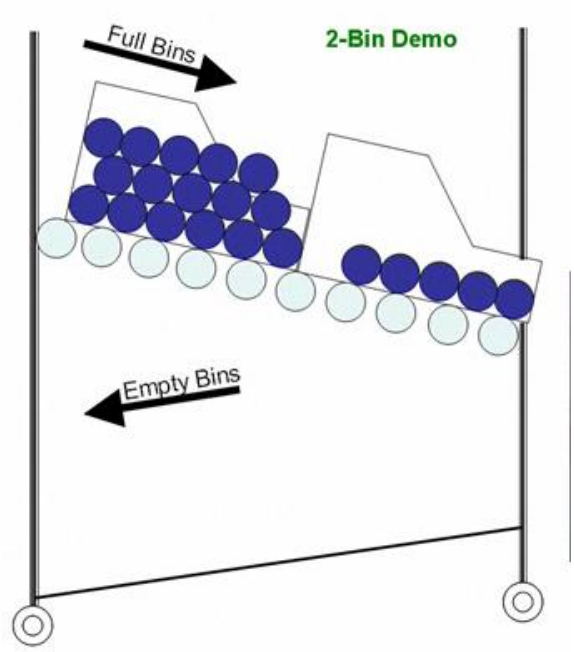

Figure 40 - Flow Rack

In the rack there will be two containers with equal content. These are placed in front of each other in a shelf that is slightly tilted towards the operator. The reason for this is that when the closest box is empty, he can remove it and the next one will slide to the front. The empty boxes will be retrieved and replaced by new, full boxes. In this way the operator won't have to leave the work cell to replenish stock. An example of the rack is shown in Figure 41.

© BUC, Kongsberg, Production Technology

Figure 41 - Internal IPS Shelving Unit

Another solution is to put these containers on the jig in relations to the operations where they are used. In this way, components will be a lot closer and then faster to obtain for the operator when components are needed ("Lean Tools", chapter 4.0, Lean Report).

This solution is according to a lean strategy, but it requires more information of the assembly process than given in our assignment. We can therefore not go deeper into this solution. As described in chapter 10.1 we will choose a solution where the IPS boxes are placed on the flow rack. The boxes will still be marked with the content and a number comparable to the placement.

The IPS system works in two steps. The first system is the internal system which we have already explained and the second step is the external system. The external system is also a shelving unit that works in the same way as the internal system. The empty boxes are put aside and once a week an external supplier comes to replenish them with the same kind of content and puts them back in the IPS rack. This is a similar rack as the flow rack but in a bigger scale and will supply all the flow racks in the production facility. The shelving unit can be seen in Figure 42.

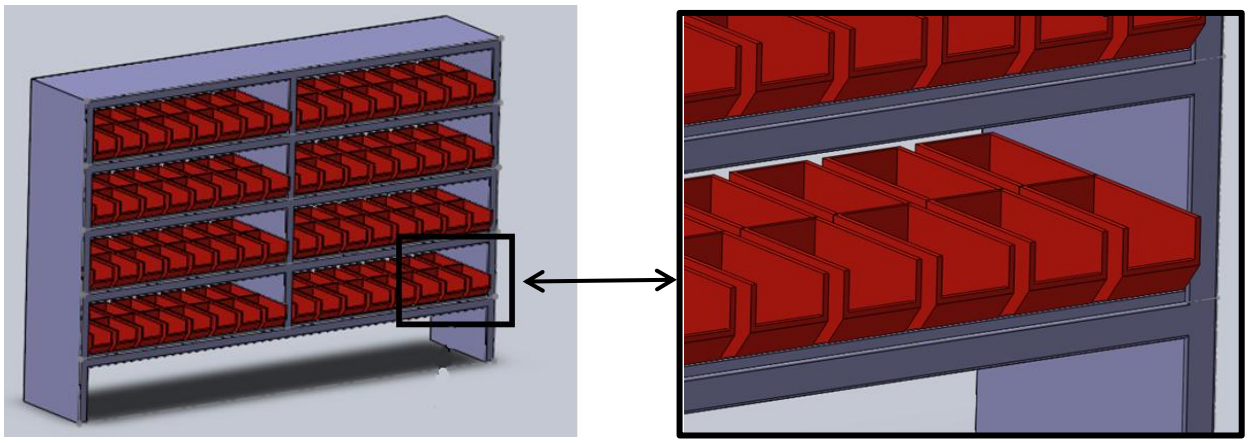

Figure 42 - External IPS Shelving Unit

This system is an orderly, logic and reliable system where there will always be components for the assembly, without having too much stock, which is one of the biggest goals in a Lean production ("Lean Tools", chapter 4.0, Lean Report).

This system can also be made even more efficient by mounting weights under each box. This weight is directly connected to the supplier and an alarm will go of when the stock is low. By using this system we can eliminate the need for the second box and thereby reduce the stock by half. This is off course more expensive, but all liability is then on the supplier.

10.5 Safety

In this chapter we are going to evaluate the dangers that can occur in the production facility. We will consider personnel safety, the transportation of goods, people and try to identify all the things that can go wrong. Then we will find ways to prevent this from happening. Safety is everything from accessible fire exits, protection wear to "fool proof"-systems within the production ("6S", chapter 4.2, Lean Report)

Accidents and injuries at work cause consequences. It harms the person or equipment and causes a lot of extra cost for the company. Examples are finding someone to fill in, training the replacement and less efficient use of time. If the accidents are so severe that human life is lost the company will get legal reactions from the authorities.

10.5.1 Personnel Safety

In a production situation with big components which weigh a lot, the human is the softest component. This means that the workers have to be very careful not to get hit or crushed by these big parts. There are some simple measures that can be made to prevent this.

It is very important to protect the employee's life and health with personal safety equipment, in areas where there are dangerous influences. There should be regular controls to check if the regulated equipment is being used and the areas where there is a need for safety equipment should be clearly marked with visible signs, as showed in Figure 43.

Figure 43 - Personal Safety Equipment Signs [8]

There must be a requirement to use helmets in the production facility. The reason for this is that there will be heavy lifting operation, and assembling and testing of the RWS may be in such a height that personnel can get hit in the head of parts or tools. The use of helmets will prevent both large and small head injuries. Even a small bump on the head can cause small concussions or cuts that are big enough that the person has to go to the emergency room to get patched up.

© BUC, Kongsberg, Production Technology

Safety shoes should be in a workplace like this. If parts fall, it's easy to get your feet crushed under it. The shoes shall have rubber soles for avoiding ESD (requirement K03.3).

Safety glasses and hearing protection might also be necessary if there are operations where the eyes are particularly vulnerable or the noise level is too high ("6S", Chapter 4.2, Lean Report).

It's the employer's job to evaluate if the workplace is potentially dangerous for the workers and provide the necessary safety equipment. This is done in collaboration with the safety representative. They also have to make sure it's being used. This also applies if the employee has health issues that make the use of this equipment difficult. In these cases facilitation measurements should be considered.

The employer is also responsible for making routines for storage, maintenance and repair of all safety equipment. Proper use and treatment decreases the dangers of impairment of the equipment's protective effect. Before the safety equipment is adopted the employer has to inform the employees of what dangers the safety equipment protects against. They also have to make sure the employees get proper information and training for using the equipment.
[6]

10.5.2 Transportation

Truck:
The truck driver must have valid license for driving the truck and follow the rules for normal operation.

There will be a marked area where the truck is allowed to drive. This area will be marked with yellow tape on the floor and the truck will not be allowed to cross this line. The aisle must be wide enough for two trucks to pass each other. There will be two main kinds of aisles. The first is a wide five meters aisle and the other aisle is three meters wide. The wide one has a yellow line marking a 0.9 meters wide sidewalk on each side leaving 3.2 meters for dealing with oncoming traffic. The truck shall always drive on the right side of the lane which will be marked with yellow arrows on the floor. The narrower aisle will only have one sidewalk on 0.9 meters and is only meant for one truck deliver a pallet at the time to then return again. An average forklift truck for our production area has a turning radius of 1.9 meter which means there will be no need for a designated turning point. Figure 44 illustrates a turning which no designated turning point.

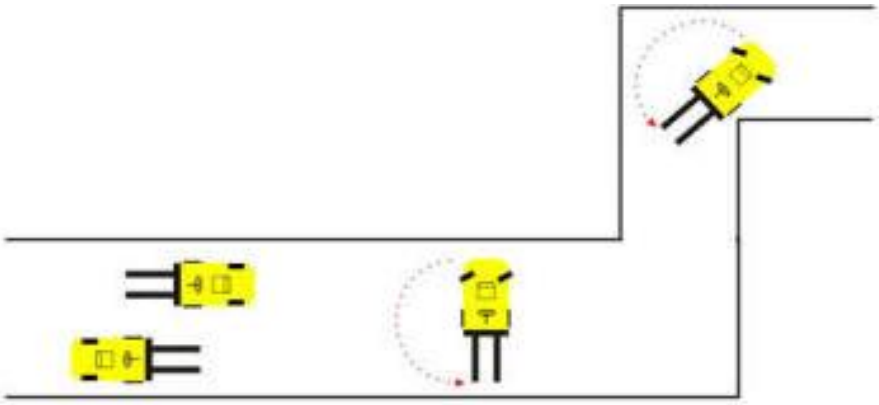

Figure 44 - Forklift Turning Radius Illustration

© BUC, Kongsberg, Production Technology

Because the load on the truck can be very large, it might be difficult for the truck driver to see the signs on the floor. The signs will therefore be placed in eye height.

Crane:
The small cranes are used for lifting parts into place when they are mounted on weapon station and the large traveling crane is used for lifting the largest parts and moving the finished product. There are great hazards when executing heavy lifting. Something can go wrong and parts of the product or the product itself might come loose and fall down. Because of the size of these parts this is very dangerous because it can cause a lot of damage to equipment, tools and personnel. The crane operator must have valid certificate for operating the crane and follow the rules for normal use.

If the product is lifted over other work stations or equipment, there is a possibility that it will fall down and break the things underneath. This will result in damage to both the product itself and the equipment or product bellow. Because of this the crane must lift the product out into the aisle before it can be moved to its destination. It is strictly prohibited to lift the product over anything. When operating the traverse crane for lifting the product, standard operation procedures are to follow.

Pedestrians:
The production area will have pedestrians in the aisles through the whole day. This includes the work force on the different workstations as well as inspectors and other visitors. Since there will be pedestrians in the production during the most of the workday, it means that there is a lot of danger for person accidents. They can be hit by moving trucks, things may fall down and they can stumble in things that are not properly stored.

To reduce the risk of person accidents there have to be some preventive actions. These actions will be pedestrian streets, pedestrian fields and safety signs. A pedestrian street is shown in Figure 45.

Figure 45 - Pedestrian Street

11 Cost Model

To satisfy the requirements K03.8 and K03.9 we have developed a generic cost model in Excel. The model is built up around the layout concept, including Case 1 and Case 2. We have calculated two additional cases that fit the concept. The four cases result in producing 1, 2.5, 5 and 6.7 products per week. The initial cost for starting production of one product per week is used as a basis for the model (Figure 46).

Initial Cost			
Cost Driver	**No.**	**Cost**	
Assembly jig	1	NOK	219 800
Test jig	1	NOK	219 800
Backup jig	1	NOK	219 800
Traverse Crane(5t)	1	NOK	170 000
Small Crane(1t)	1	NOK	100 000
Tourqe Wrench	2	NOK	24 000
Tool cabinet	2	NOK	9 480
Test equipment	1	NOK	18 000
Computer	3	NOK	15 000
Work Bench+Chair	3	NOK	20 850
Truck(10t)	1	NOK	700 000
Pallet Jack	1	NOK	5 000
Rent of area	1	NOK	-
Power Supply	1	NOK	-
-	-	-	
-	-	-	
SUM		**NOK**	**1 721 730**

Figure 46 - Cost Model, Initial Cost

Calculating the investment cost of necessary equipment and the weekly salary cost, the model will give an approximately total cost of starting the production of the RWS. If the production has to be increased from one product per week up to a maximum of 6.7 products per week, the model will show the initial cost, the extra investment cost, the salary cost and the total cost. The model also shows some information about the layout including labor, circulation rate, equipment and minimum need of area (Figure 47). A product flow matrix for each case is also illustrated (Figure 48).

Products per week: Max 6.67
Stations: 2 assembly stations, 4 test stations and 1 backup station.
Circulation rate: 6 days
Number of workers: 2 assemblers + 4 testers
Assy: 9 hours
Test: 18 Hours
Inspection :2 Hours
Packing 4: hours
Minimum Area: 650m2

Figure 47 - Cost Model, Layout Information

© BUC, Kongsberg, Production Technology

Product Flow							
	Unit 1	Unit 2	Unit 3	Unit 4	Unit 5	Unit 6	Unit 7
Day 1	Assy 1	-	-	-	-	-	-
Day 2	Assy 1/	/Assy 1	Assy 2	-	-	-	-
Day 3	Test 1	Assy 1	Assy 2/	/Assy 2	-	-	-
Day 4	Test 1	Test 2	Test 3	Assy 2	Assy 1	-	-
Day 5	Test 1	Test 2	Test 3	Test 4	Assy 1/	/Assy 1	Assy 2
Day 6	Insp./Pack.	Test 2	Test 3	Test 4	Test 1	Assy 1	Assy 2/
Day 7	-	Insp./Pack.	Insp./Pack.	Test 4	Test 1	Test 2	Test 3
Day 8	-	-	-	Insp./Pack.	Test 1	Test 2	Test 3
Day 9	-	-	-	-	Insp./Pack.	Test 2	Test 3
Day 10	-	-	-	-	-	Insp./Pack.	Insp./Pack.

Figure 48 - Cost Model, Product Flow Matrix

The cost model can be used as a basis for assessment for each order of the RWS. By plotting in the order, the model will calculate the total cost for each order. From this, KPS can make an assessment if it would be economically viable to accept the order as it is, expand the production or start the production earlier to ensure correct delivery date.

The cost model can be found in the digital edition of this Bachelor Thesis.

11.1 Instruction of Use

The user must plot the order quantum and order time (in weeks). The model calculates how many products that has to be produced per week, but there are only four different options in this model. The number of products per week will be rounded up to fit one of the four cases (1, 2.5, 5 or 6.7).

Input		
Please enter:		
Order quantum	32	
Order time(weeks)	5	
Products per week	6,40	≈6,7

Figure 49 - Cost Model, Input

The model checks if the number of products per week fit with one of the four cases and show the initial cost, extra cost per order, salary cost per order and total cost (Figure 50).

© BUC, Kongsberg, Production Technology

Initial Inv. Cost	
NOK	1 721 730
Extra Inv. Cost	
NOK	1 097 740
Total Inv. Cost	
NOK	2 819 470

Total HR order cost	
NOK	1 175 373

Assembly Station			
Cost driver	No.	Cost	
Jig	1	NOK	219 800
Small crane	1	NOK	100 000
Tourque Wrench	1	NOK	12 000
Tool cabinet	1	NOK	4 740
Work Bench+Chair	1	NOK	6 950
Computer	1	NOK	5 000
-	-	NOK	-
-	-	NOK	-
-	-	NOK	-
SUM		**NOK**	**348 490**

Test Station			
Cost driver	No.	Cost	
Jig	3	NOK	659 400
Test equipment	3	NOK	54 000
Work Bench+Chair	3	NOK	20 850
Computer	3	NOK	15 000
-	-	NOK	-
-	-	NOK	-
-	-	NOK	-
-	-	NOK	-
-	-	NOK	-
SUM		**NOK**	**749 250**

Backup Station			
Cost driver	No.	Cost	
Jig	0	NOK	-
Test equipment	0	NOK	-
Tourque Wrench	0	NOK	-
Tool cabinet	0	NOK	-
Work Bench+Chair	0	NOK	-
Computer	0	NOK	-
-	-	NOK	-
-	-	NOK	-
-	-	NOK	-
SUM		**NOK**	**-**

Human Resources(order cost)			
Cost driver	No.	Cost	
Assembler	2	NOK	391 791
Tester	4	NOK	783 582
-	-	NOK	-
-	-	NOK	-
-	-	NOK	-
-	-	NOK	-
-	-	NOK	-
-	-	NOK	-
-	-	NOK	-
SUM		**NOK**	**1 175 373**

Figure 50 - Cost Model, Extra Cost and Total Cost

12 References

1. Modig, Niklas, & Åhlström Pär. (2011). *Vad är lean?* Stockholm School of Economics Institute for Research. Sweden.
2. Cyr, K. (2007). *Learning curve*. http://cost.jsc.nasa.gov/learn.html (Downloaded: 12.03.25)
3. Burbridge, John L. (1990). *Production flow analysis for planning group technology.*
4. McMahon, Tom. (2009). *Single Point Lessons: An Educational Tool.* http://www.aleanjourney.com/2009/06/single-point-lessons-educational-tool.html (Downloaded: 12.05.18)
5. Fuss & O'Neill. (2012). *SPL Archive.* http://www.fando.com/News_&_Resources/Single_Point_Lessons/SPL_Archive/ (Downloaded: 12.05.18)
6. Arbeidstilsynet.no. (2012). *Personlig verneutstyr.* http://www.arbeidstilsynet.no/fakta.html?tid=78234 (Downloaded: 12.04.12)
7. All Prices are from http://www.abus-kran.no/ by Grunde Tveit, gtv@industrikran.no.
8. Hse.cov.uk. (2011). *Mandatory signs.* http://www.hse.gov.uk/workplacetransport/safetysigns/mandatory.htm (Downloaded: 12.03.11)

© BUC, Kongsberg, Production Technology

13 Abbreviations

Abbreviation	Description
Assy.	Assembly
El.	Electric
FAT	Factory acceptance test
h	hour
IHT	In house test
IPS	Integrated Products and Services
FAT	Factory acceptance test
HR	Human Resources
HSE	Health, Safety, and Environment
HUC	Buskerud University College
KPI	Key Performance indicators
KPS	Kongsberg Protech Systems
LLC	Limited Liability Company
m	meter
No	number
NOK	Norwegian kroner
Numb.	Number
OPL	One Point Lesson
Ref.	Reference
Rev.	Revision
RWS	Remote weapon station
Sec	Second
Tot.	Total
w	worker

© BUC, Kongsberg, Production Technology