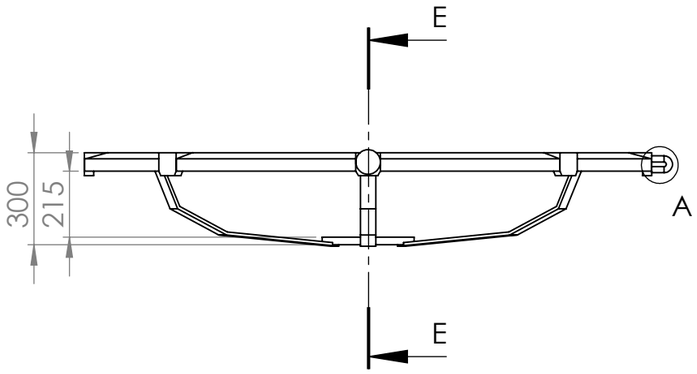

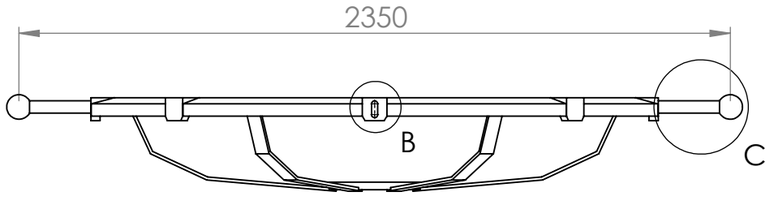

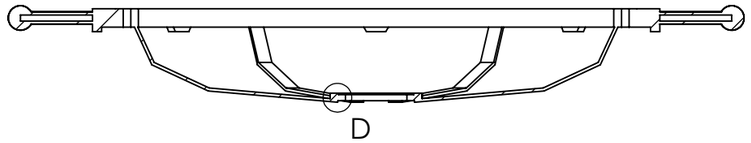

SECTION E-E
SCALE 1 : 20

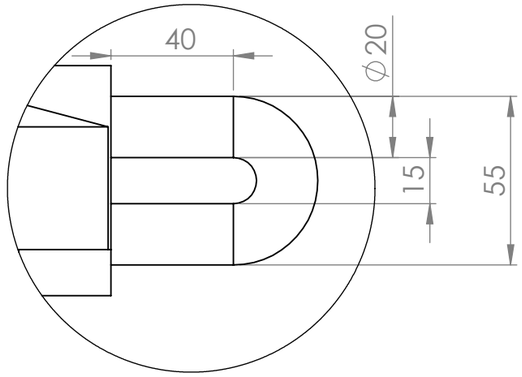

DETAIL A
SCALE 1 : 2

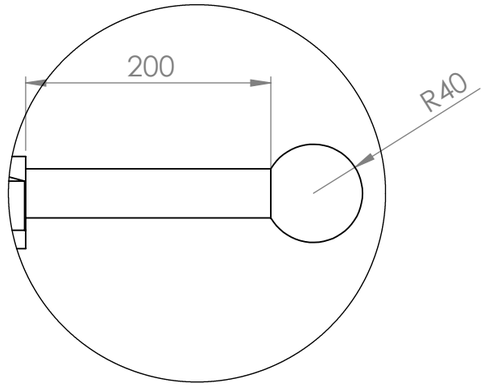

DETAIL C
SCALE 1 : 5

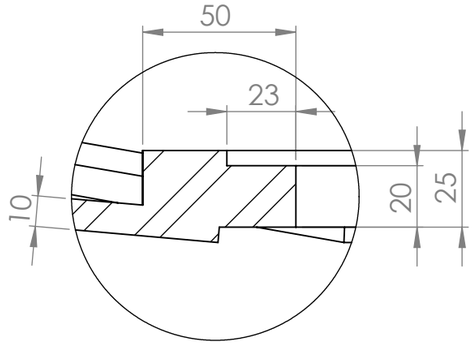

DETAIL D
SCALE 1 : 2

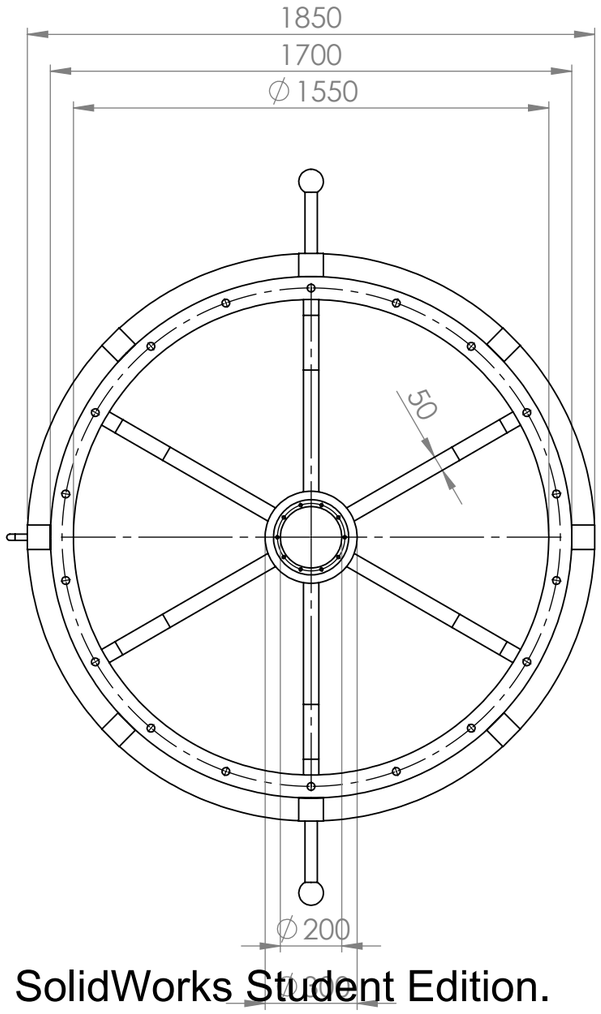

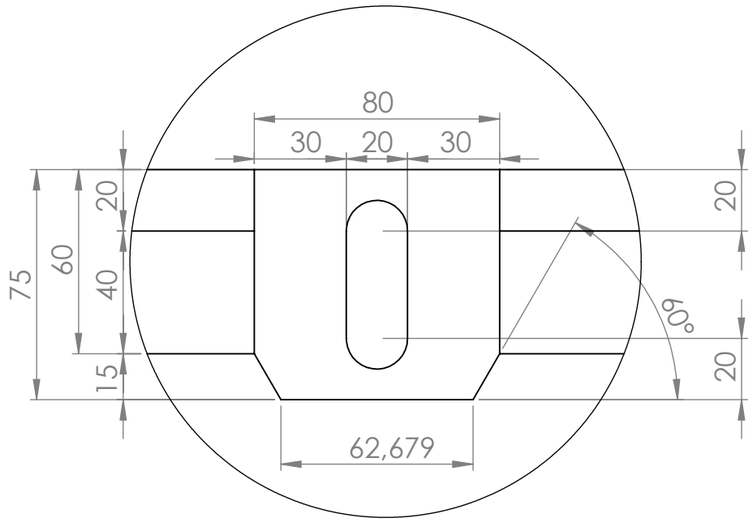

DETAIL B
SCALE 1 : 2

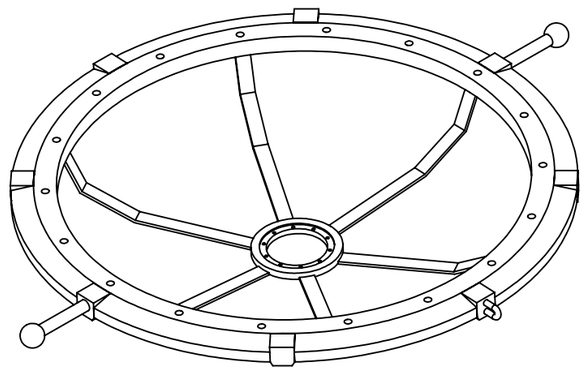

SolidWorks Student Edition.
For Academic Use Only.

TITLE:	Jig Adapter				
DESIGNER:	Production Technology			DOCUMENT NO:	D01P
DATE	2012-18-05	All dimentions are in millimeter	SCALE:1:5050	SHEET 1 OF 1	A3