Document Name:	Jig Report
Project Name:	Production Technology
Project Number:	2012-2
Course:	SFHO 03200 – H11 – Bachelor Thesis with project control
Availability:	3. year, Bachelor in Engineering at BUC – Buskerud University College
Supervisor:	Kjell Enger, BUC
Contracting Entity:	Kongsberg Protech Systems
Group:	
Halvor Eide, Ørjan Ohm, Sander K. Trandem, Knut Anders Lia and Alexander Svendsen	

Document History		
Rev.	**Changes**	**Date**
-		2012-05-09
1	Changed the safety chapter, template update, Grammar	2012-05-16

(Intentionally Left Blank)

© BUC, Kongsberg, Production Technology

List of Contents

1 Introduction 6
1.1 Document Overview 7
1.2 Document Purpose 7
2 Case Study 8
2.1 Jig Purpose 9
2.2 Jig Requirements 10
3 Jig Concepts 11
3.1 Concept Scissor Lift 12
3.2 Concept Synergistic Motion Platform 14
3.3 Concept Three Axial Platform 15
3.4 Concept Telescope Lift 16
3.5 Jig Concepts Conclusion 17
4 Jig Design 18
4.1 Adapter with Lock System 19
4.2 Lock System 20
4.3 Top Frame 21
4.4 Lifting System 21
4.5 Telescopic support 22
4.6 Part List 23
4.7 Materials 25
5 Structure Analysis 27
5.1 FEM Analysis 29
5.2 FEM Analysis – The Result 34
5.3 Welding 38
6 Safety Operating Procedures 45
6.1 Central Core 45
6.2 Circumference Perimeter Radius 46
7 Cost Estimation 47
8 References 48
9 Abbreviations 49

© BUC, Kongsberg, Production Technology

List of Figures

Figure 1 - Document Relation 7
Figure 2 - Product Dimensions 8
Figure 3 - Case Study Illustration 9
Figure 4 - Concept Scissor Lift 12
Figure 5 - Concept Synergistic Motion Platform 14
Figure 6 - Concept Three Axial Platform 15
Figure 7 - Concept Telescope Lift 16
Figure 8 - Jig Assembly with Adapter Illustration 18
Figure 9 - Adapter with Lock System 19
Figure 10 - Lifting Lug and Steering Hook 20
Figure 11 - Lock System and Extruded Bracket 20
Figure 12 - Top Frame with Section View 21
Figure 13 - Ball Screw Illustration 21
Figure 14 - Telescopic Leg Support 22
Figure 15 - Jig Assembly Exploded View 24
Figure 16 - Cylindrical Body with Coordinates 28
Figure 17 - Simulation Model 29
Figure 18 - Material Properties, AISI 4340 Steel, Annealed 30
Figure 19 - Material Properties, PEHD 30
Figure 20 - Mesh Parameters 31
Figure 21 - Mesh Control 31
Figure 22 - Fixed Geometry 32
Figure 23 - Symmetry Fixture 32
Figure 24 - External Load, Force 33
Figure 25 - External Load, Torque 34
Figure 26 - Max von Mises Stress 34
Figure 27 - Max von Mises Stress, Zoom 35
Figure 28 - Max von Mises Stress, ISO Clipping 1 36
Figure 29 - Strain 36
Figure 30 - Max von Mises Stress, ISO Clipping 2 37

© BUC, Kongsberg, Production Technology

Figure 31 - Displacement 37
Figure 32 - Weld Location 38
Figure 33 - Torque Illustration 39
Figure 34 - Illustration, Weld 1 39
Figure 35 - Illustration, Weld 2 39
Figure 36 - Jig Height 40
Figure 37 - Loads on Weld 41
Figure 38 - Second Moment of Area of Rectangular Cross Section [5] 41
Figure 39 - Weld, Stress [6] 42
Figure 40 - Stresses on Weld 43
Figure 41 - FEM Weld Dimensions 44
Figure 42 - ESD Sign 45
Figure 43 - Pressure Sensitive Safety Mat 45
Figure 44 - Magnetic Safety Switch 46
Figure 45 - Emergency Shutdown Button with Caution Sign 46

List of Tables

Table 1 - Production Jig Requirements 10
Table 2 - Jig Assembly Part List 23
Table 3 - Factors Affecting Material Selection 25
Table 4 - Material Table for AISI 4340 [2] 26
Table 5 - Excerpt of Material Table for HDPE [3] 26
Table 6 - Cost Estimation for One Complete Jig 47

© BUC, Kongsberg, Production Technology

1 Introduction

Production Technology is a Bachelor Thesis taken on by five mechanical engineering students from Buskerud University College in Kongsberg.

The Scope is limited to five study credits for the first semester (fall 2011), then 15 study credits for the second semester (spring 2012). This is estimated to 550 work hours per group member. There will be a higher priority on documentation then in a normal industry. This will give a better basis for evaluating the project.

The purpose of this project is to evaluate production models for Kongsberg Protech Systems (KPS). Kongsberg Protech Systems has developed a new product called Protector Medium Caliber that is going into production. To make the production effective they need to develop a specific production model that they can integrate in all their locations, and in different production scales.

The company has other similar products that are already in production. In the existing production there are used several Lean tools to make the production as efficient as possible. The difference between these products and the new one is the size and weight. The existing products are of smaller caliber and therefore smaller in size and easier to handle, than the new Protector Medium Caliber. Due to the size and weight of the product, they need to develop a completely new assembly process. The production process is the backbone in the company and it is vital for the company to compete with others.

Our assignment is to make a main study that evaluates different production models and create concepts for the production of Protector Medium Caliber. The production is divided into two cases with different production rate, where Case 1 handles high rate production and Case 2 handles low rate production. For both cases, we will consider the need of cranes, lifts and other equipment to make the assembly as easy and effective as possible. In the production of Protector Medium Caliber there will be a need for a jig or a fixture to hold the product while assembling and testing. This jig will be designed in SolidWorks and integrated in our production model.

To be able to make a good analysis, we need to learn about production technologies and Lean manufacturing. By learning the basics of these subjects, we will ensure effective manufacturing of quality products and a safe and good environment for the workers. To accomplish this, two generic pre-studies will be produced as supporting literature. One study for production technologies and one study for Lean manufacturing. The two studies will be used as a support for arguments for the different choices and conclusions we make in our main study.

This Bachelor Thesis is a theoretical study and takes form of a written report with drawings and illustrations. The sources used are internet, personnel of KPS and literature in form of books. Project expenses are literature and printing of reports and poster.

© BUC, Kongsberg, Production Technology

1.1 Document Overview

This document is one of many reports in the Bachelor Thesis 2012-2.

The Figure below will give an overview and placement of the reports and documents for the Bachelor Thesis 2012-2. The textboxes represents documents and the green box is representing this document. The Appendix documents are not listed.

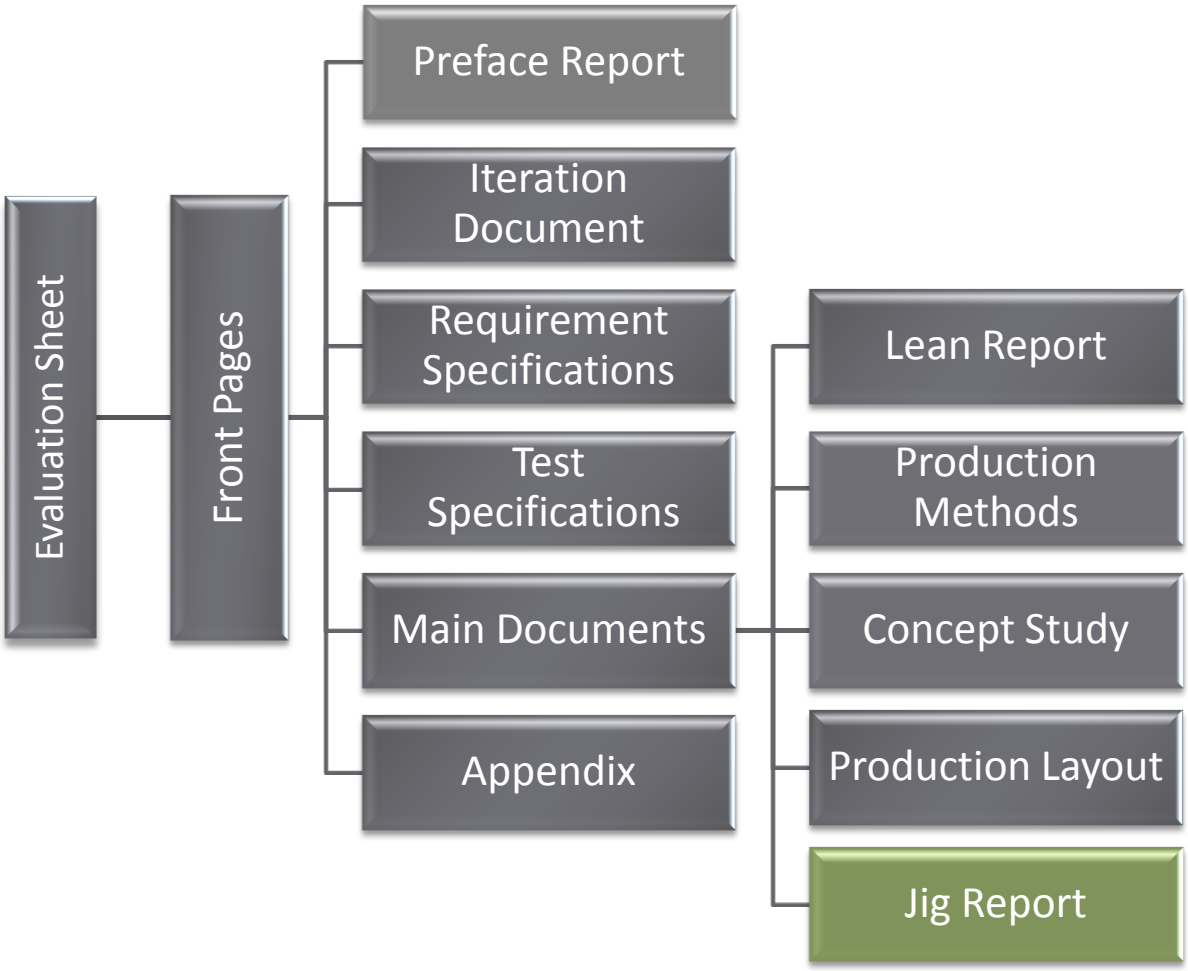

Figure 1 - Document Relation

1.2 Document Purpose

The purpose of this document is to give an understanding of what a jig is, and its purpose for the construction of Protector Medium Caliber. The document will describe the case study with its needs and requirements. From this, we have developed different jig concepts satisfying needs and requirements. A conclusion will verify our selection of one concept to describe in more detail. This document gives detailed information of a final jig design including construction analysis, part list and further features descriptions.

© BUC, Kongsberg, Production Technology

2 Case Study

The product is to be assembled of several prefabricated parts and tested before it's ready to be packed and delivered. The Production Layout Report describes four types of stations: Assembly, test, backup and packing. The two main stations are the assembly station and the test station. The backup station is an extra station for handling both assembly and test operations.

The assembled product has a maximum total weight of 3280 kg, 4513 mm length, 2500 mm width, 688 mm height and a rotating diameter of 3300 mm. The RWS unit is shown in Figure 2.

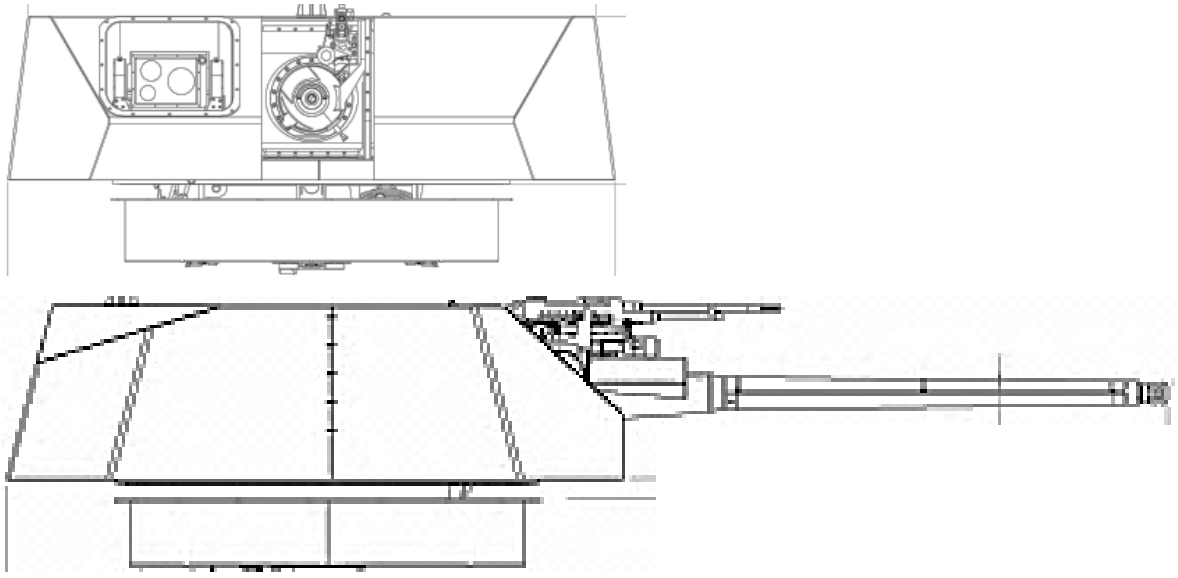

Figure 2 - Product Dimensions

The production consists in general of assembling prefabricated parts and subassemblies on to a fixture. This production will be done manually with help from cranes and mechanical hand tools. Operators must have access from above and underneath the assembly. The product will be connected to the vehicle by its main frame and a slip ring will build down from the main frame, approximately 300 mm. The slip ring will be connected to a plug with all the cables and connections during the test. This will add another 300 mm beneath the slip ring, which result in the need of a jig or fixture for the main frame to be mounted on with a minimum gap of 600 mm from the floor. The height from the main frame to the top of the product is 688 mm, measured without antenna. In a height of 600 mm operators are able to assemble parts and cables in a proper operation height. It's not efficient to do all assembling in this height as there are parts and connections beneath the main frame of the product. During the test, it might be situations of failure where the access from underneath the product is essential for inspections and corrections. In such case, the product needs to be elevated more than 600 mm from the floor. An appropriate height would be a gap of 1400 mm from ground floor. These cases are illustrated in Figure 3.

© BUC, Kongsberg, Production Technology

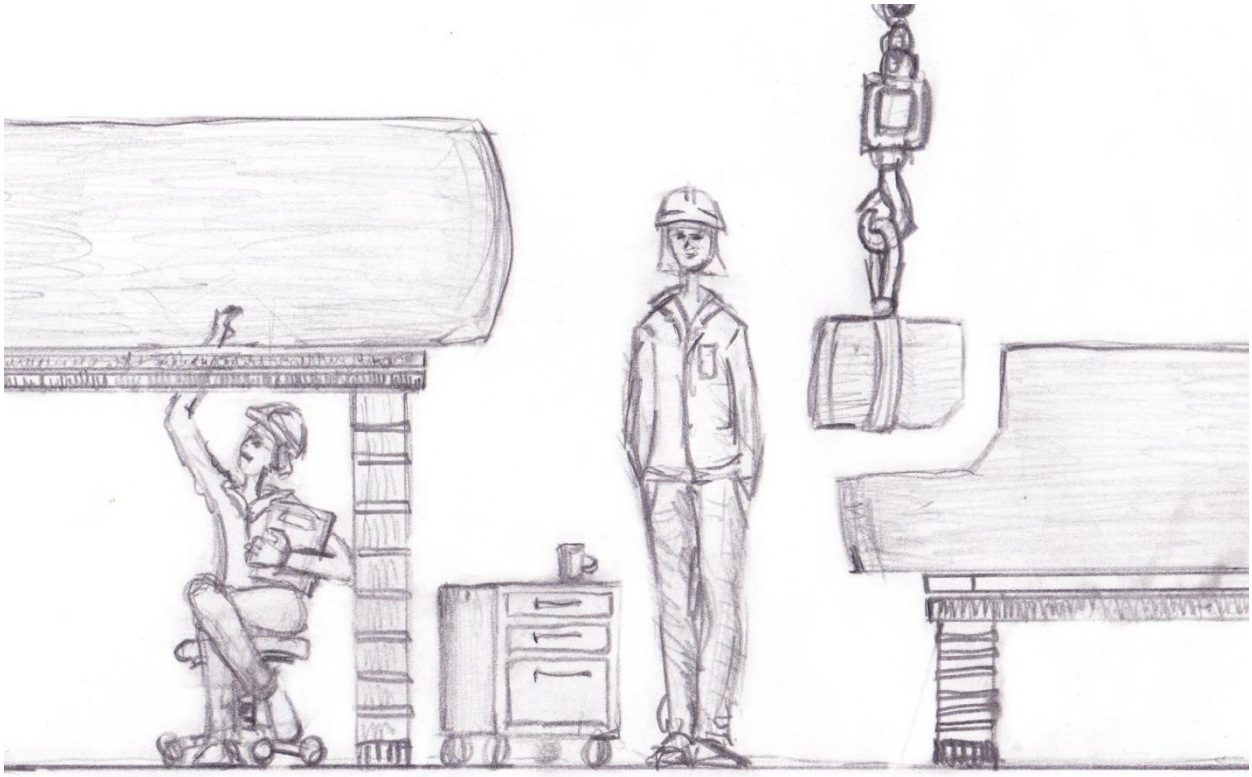

Figure 3 - Case Study Illustration

2.1 Jig Purpose

The natural solution for the case study is to use a jig or fixture for the production of the Protector Medium Caliber.

There are different definitions of a jig, such as fixture, and we will use both jig and fixture in this report. A jigs purpose is to hold a work piece during a production. This means that this jig is a type of fixture that holds the product when assembled and tested.

A Fixture is a special designed tool for the purpose of:

- Locating the work
- Clamping the work
- Supporting the work
- Holding all the elements together in a rigid unit during a manufacturing operation.

The most important considerations are accuracy and rigidity, followed by ease of use, and economy in construction.

© BUC, Kongsberg, Production Technology

2.2 Jig Requirements

This chapter describes the requirements for the jig. All requirements are listed in Table 1. The Production Layout Report describes the different stations for assembly and test which have different requirements. Additional there is a third type of station which is a backup station which follows the requirements for both. All requirements are prioritized from A to C, for both the assembly station and test station.

Table 1 - Production Jig Requirements

K04 Production Jig				
ID	**Requirement**	**Comments**	**Priority**	
			Test	**Assem.**
K04.1	The jig has to be ESD safe.		A	B
~~K04.2~~	The jig shall withstand at least 3000 kg.	Replaced w/ K04.14	A	A
~~K04.3~~	The product must be reachable for a lifting device from above during all operations of the jig.	Replaced w/ K03.21	A	A
K04.4	The product must be reachable on the jig, for assembling of parts.		A	A
K04.5	The product must be reachable from underneath the jig.		B	A
K04.6	The product has to be able to be tested on the jig.		A	NA
K04.7	The jig must withstand a full stop from full rotation at 90 degrees/sec, in 0.5 sec when rotating testing.		A	NA
K04.8	The jig needs a crawl opening underneath the product at minimum 140 cm.		B	A
K04.9	No part of the jig shall obstruct the nut gaps of the main frame.		A	A
K04.10	No parts of the jig shall obstruct the rotation and/or elevation of the product.		A	A
K04.11	The jig shall be made with a minimum risk of clamp danger.		A	A
K04.12	The jig shall be made in a height for ergonomically use.		B	B
K04.13	The jig shall not be able to tip.		A	A
K04.14	The jig shall withstand a weight of 6560 kg.		A	A

© BUC, Kongsberg, Production Technology

3 Jig Concepts

This chapter describes different concepts for jig and the advantages and disadvantages for each concept. A conclusion will take all concepts into consideration and state a solution that has a minimum of disadvantages and most of the advantages.

There are different requirements for the test and assembly station, shown in the list of requirements in Table 1. Additional to this, the backup station will follow the strongest requirements for both stations. This means that one possible solution is to design three different jigs for the three types of stations.

In collaboration with Kongsberg Protech Systems we have determined that there is a fundamental advantage to have one concept that can be uniform for all stations. By having one jig that satisfies the requirements for all stations it will reduce the development cost and investment cost for the production.

© BUC, Kongsberg, Production Technology

3.1 Concept Scissor Lift

This concept is based on the regular lifting systems for cars and lifting tables in workshops. It works by having four square beams, two on each side, crossing each other with a bolt hinge. The beams are bolted in one of the ends, and free rolling in the other end (illustrated in Figure 4). The free rolling ends will slide during lifting and move the center of gravity, which will cause instability and variable load in the structure.

The beams will, during lifting, narrow the angle between the beams until it overlap, just like a scissor. Thereby the name scissor lifts. By having one or two hydraulic or ball screw cylinders fastened to the floor and on the beams, the system can be elevated and lowered. The system is illustrated in Figure 4.

Figure 4 - Concept Scissor Lift

Advantages:

- Low production cost
- Low development cost
- Standard parts
- Low maintenance
- Low minimum height
- High maximum height
- Simple control system

Disadvantages:

- Great clamping hazard
- Instability
- Variable loads
- Several moving parts interacting
- Cannot withstand great rotational forces during test procedures.

© BUC, Kongsberg, Production Technology

Discussion:

The scissor lift is a common concept in the industry and in workshops, so it would be easy to find standard parts and dimensions. It would therefore be possible to get good price offers from suppliers for construction and deliver of a scissor jig.

The disadvantages of this concept can cause a problem with the stability of the jig when lifting such a massive product with a weight of 3280 kg. This concept needs some kind of barrier skirt for the scissor beams so no person can be squeezed between the scissors.

This concept is great for high lifting and lowering during assembling. For the test station this concept would not withstand the rotational forces, acting on the jig during the test procedures. This could in worst case damage the jig. For assembly station, the scissor lift concept fulfills all requirements and by its fast and easy operations for lifting, the Lean mentality is greatly present since the assembly time during production is reduced.

© BUC, Kongsberg, Production Technology

3.2 Concept Synergistic Motion Platform

This concept is based on the commonly known motion platform used in flight simulators. A synergistic motion platform, also called Stewart platform, consists of six prismatic actuators that could be ball screw or hydraulic cylinders. These actuators are mounted in pairs to the ground, crossing over to three mounting points on a top plate. The mounted product on this platform can be moved in six degrees of freedom which is the possible movement for a freely-suspended body. This concept can be seen in Figure 5.

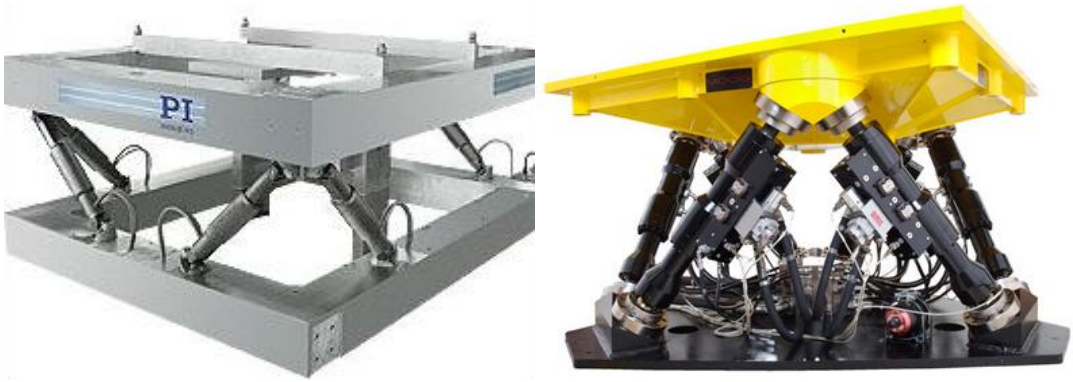

Figure 5 - Concept Synergistic Motion Platform

Advantages:

- Lean productivity by easy access during construction caused by tilting possibilities.

Disadvantages:

- Limited access beneath the product
- Limited lifting ability
- Instability caused by a moving center of gravity when tilting.
- Expensive development costs
- Expensive productions cost caused by a vast amount of advanced parts.
- Moving joints in all ends of the cylinders
- Advanced control system

Discussion:

There is only one thing that is in favor about this concept. That is the tilting possibility where the assembly can be tilted to all sides for greater access. This makes as good lean argument as it could lower the circulation rate during production and trouble shooting. This concept is compact with limited space for work beneath the product. When testing, this jig would most likely not withstand the forces acting on the jig from the product.

With this, the jig does not satisfy all requirements for both assembling and testing. This concept would then not be a wise choice because it would be very costly and could complicate the whole production.

© BUC, Kongsberg, Production Technology

3.3 Concept Three Axial Platform

By looking at a welding turntable (Figure 6) we can see how the concept works. The table can rotate 360 degrees clockwise or counter clockwise. It can also tilt down 90 degrees.

Figure 6 - Concept Three Axial Platform

Advantages:

- Lean productivity by easy access during construction caused by tilting possibilities.
- Ergonomically use
- Access to the whole product from one operation side.

Disadvantages:

- Expensive development cost
- Instability caused by a moving center of gravity when tilting.
- Great concentrated stresses on the systems
- A huge total weight of jig caused by proportions
- Moving parts interacting

Discussion:

With a turntable, the worker can always work from the same position and just turn the product standing on the table in the preferred direction. The reason for having a tilt option would be to have easy access to the difficult areas on the product. This will reduce the time and effort of using ladders and platforms. In this case the product is heavy and in large dimensions, which would complicate the jig in such a matter that the construction cost could be higher than the value of use. The production will neither be assembled by automated robots or in a large scale such as car production. Because of this there is no need for the advanced functions the welding turntable concept offers. When the product is tilted and rotated, the product is in danger of intercept and crash with the floor or the jig itself. To avoid this, the jig would have to be dimensioned in massive proportions, which are not desirable.

© BUC, Kongsberg, Production Technology

3.4 Concept Telescope Lift

This concept has four telescopic legs, one in each corner of a square supporting and lifting the platform. The telescopic legs are either ball screw or hydraulic jacks (illustrated in Figure 7).

Figure 7 - Concept Telescope Lift

Advantages:

- Low installation height, enabling a compact design in the retracted condition.
- The telescopic function enables very large stroke movements.
- Constant stability in all states of elevation
- Easy construction and maintenance
- Access from underneath the product
- Few moveable parts
- Simple control system

Disadvantages:

- Weak for withstanding great rotational forces during test procedures.
- No tilt possibilities

Discussion:

The telescopic lift concept is simple which makes it interesting for further development. The concept satisfies all requirements for the assembly production which makes it possible to use this concept as a jig for this station. To make the jig uniform for both production and testing it has to be capable to withstand great rotational forces acting on the jig. This could be solved by telescopic beams constructed and dimensioned for the rotating stresses, as well as test procedures could require a low test height.

© BUC, Kongsberg, Production Technology

3.5 Jig Concepts Conclusion

The discussion of the four concepts gave us a lot of inspiration on which concept to use for the jig. In cooperation with KPS, the decision fell on the last concept, telescope lift. This is the concept we will consider when developing and designing our jig. The reason for the choice is that this concept could fulfill the demands and requirements for jigs purpose. There is another strong argument for choosing this final jig concept; one uniform jig for all stations as it can be used for both assembling and testing (which will cover requirement K04.6). It will be designed with four telescope lifting devices, one in each corner. The total lifting capacity will be 6560 kg (requirement K04.14), as the unit weight is maximum 3280 kg and with a factory of safety of two. The jig will have a minimum height of 630 mm and a maximum height for the jig will be 1400 mm from the floor (requirement K04.8). Since the telescopes alone are not strong enough to withstand rotational forces during test, there will be a telescopic beam in each corner which will withstand the forces acting on the jig. The jig can't be designed in such matter that it will obstruct the rotation and/or elevation of the product, during testing or assembling (requirement K04.10).

© BUC, Kongsberg, Production Technology

4 Jig Design

This chapter will describe the jig solution in detail. All features and functions are analyzed and described with a part list and technical drawings which includes all relevant dimensions. The jig will also have documentation of an accepted analysis done in SolidWorks Simulations. A result of this chapter will be a cost estimation of each element, including the total production cost for one complete jig deliver. The Figure 8, below show an illustration of the jig including the adapter.

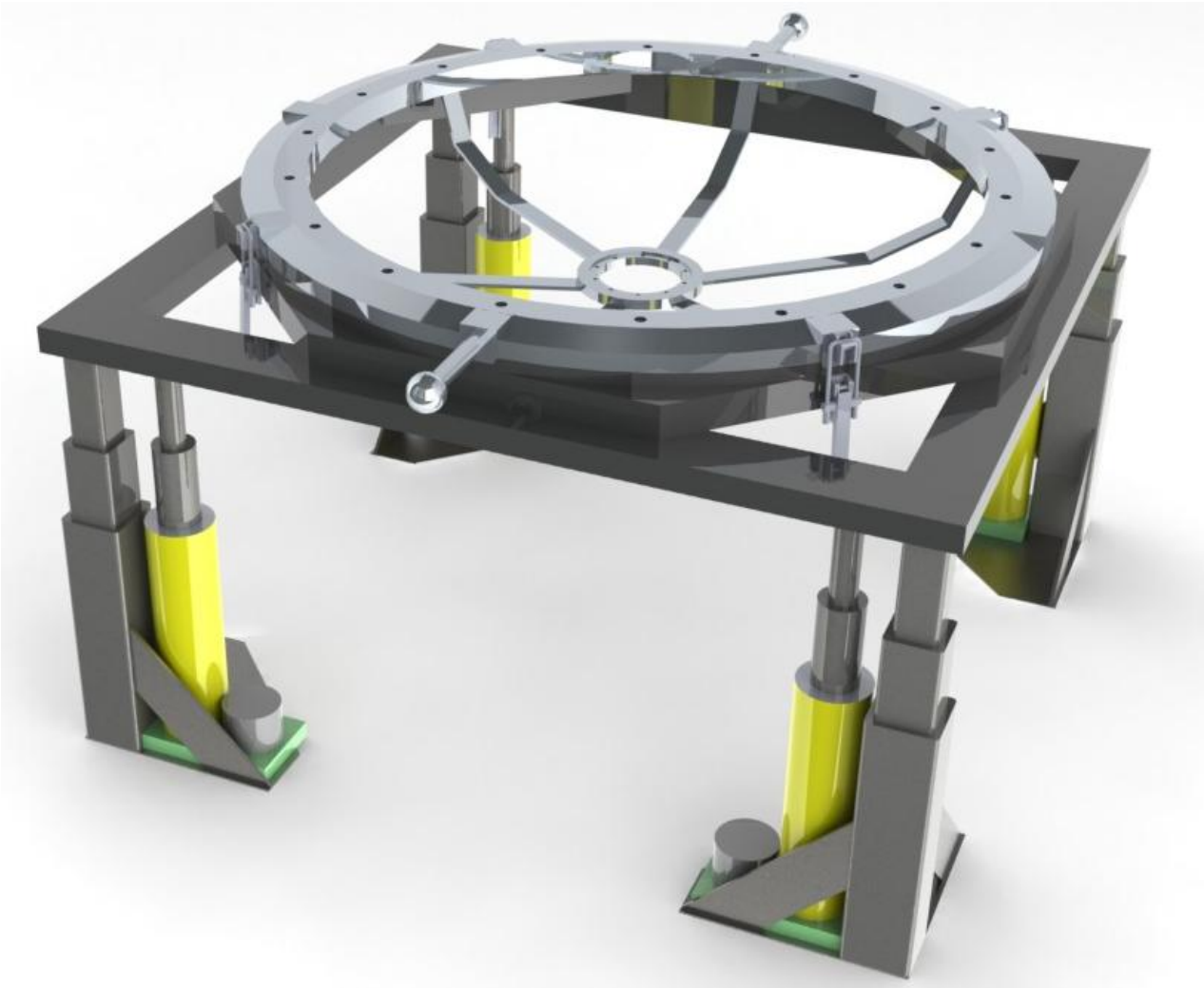

Figure 8 - Jig Assembly with Adapter Illustration

© BUC, Kongsberg, Production Technology

4.1 Adapter with Lock System

For the prototype assemblies it is developed a ring that the RWS is connected to under the whole production. This ring represents the body of the vehicle. The final product in service has a bottom cover supporting the slip ring, bolted to the roof, inside the vehicle. This bottom cover cannot be directly connected to the RWS since it is fastened to the body of the vehicle. Both the RWS and the bottom cover can therefore be connected to this ring. The bottom cover will be mounted before test, to protect the slip ring. After the test is complete, the bottom cover will be demounted and sent as a separate part when packing. To avoid this unnecessary, non-value adding operation of mounting/demounting, we developed an adapter. This can protect and support the slip ring during test, and be a part of the production, like the ring used today. This will reduce the circulation rate ("Lean Strategy", chapter 6.0, Lean Report)

The adapter is designed with six arms to support the slip ring, so there is no need to assemble the bottom cover. The slip ring consists of cables that connect the product to operation equipment. The functional purpose of this slip ring is that the unit can rotate freely without twisting the cables.

The RWS will never rotate with personnel present near the jig. To assure this, the reachable jig area is covered with pressurized safety mats and the station is fenced with magnetic door lock. This is described in more detail in chapter 5.

With a lock system, the adapter can easily be attached and detached from the jig. The adapter will be bolted to the main frame as the first step in the assembly of a unit. The adapter will protect the main frame when it is moved from one station to another. An illustration of the adapter is shown in Figure 9.

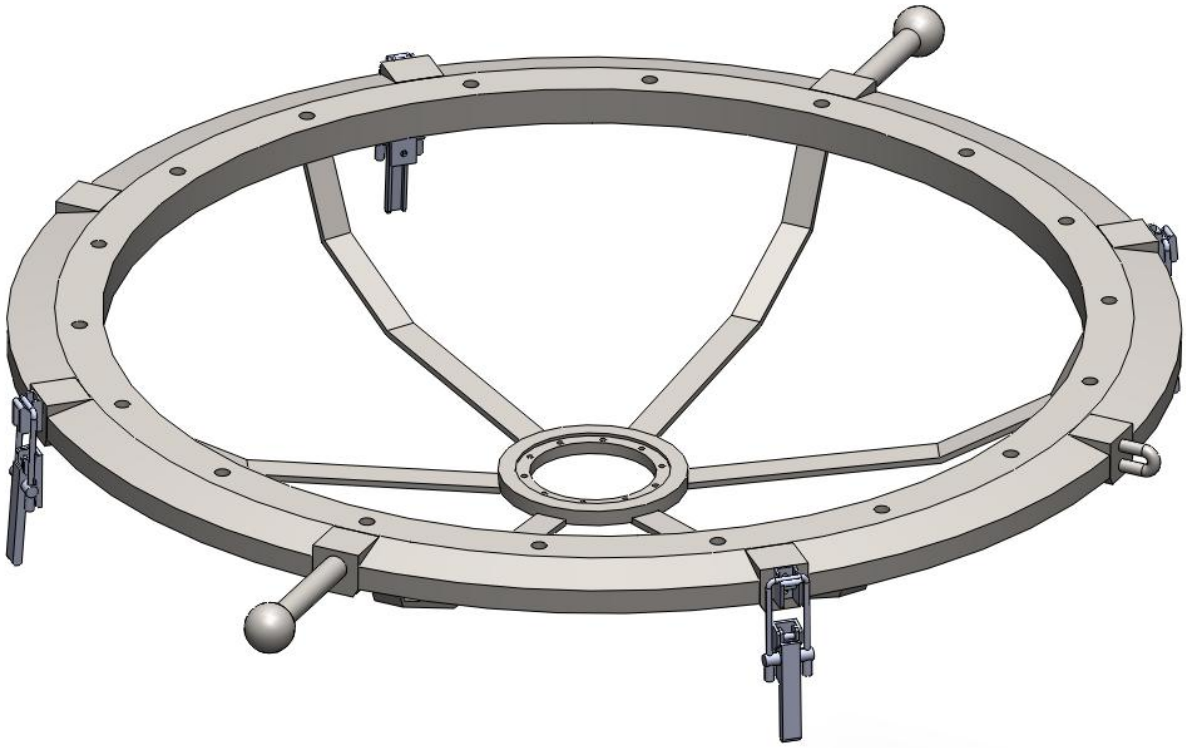

Figure 9 - Adapter with Lock System

© BUC, Kongsberg, Production Technology

The adapter will save production time by eliminating the need of bottom cover and by the fast lock system between the adapter and the jig frame. It will take less time using an easy lock system, then bolting the adapter to the jig, since the product are sent from the assembly jig to the test jig, during production. This will give a low circulation rate ("Lean Strategy", chapter 6, Lean Report). Technical drawings of the adapter with lock system is described in more detail in the appendix, section D01.

The adapter is bolted to the main frame as the final step in the assembly of main frame (requirement K04.9). This is done on a dedicated table at the assembly station. The main frame is assembled upside down before the adapter is attached with bolts. The assembly needs to be turned the other way and mounted to the assembly jig. The adapter is equipped with two lifting lugs and a steering hook as shown in Figure 10. This makes it able to use a lifting yoke to lift and turn the adapter 180 degrees and lower it on to the jig.

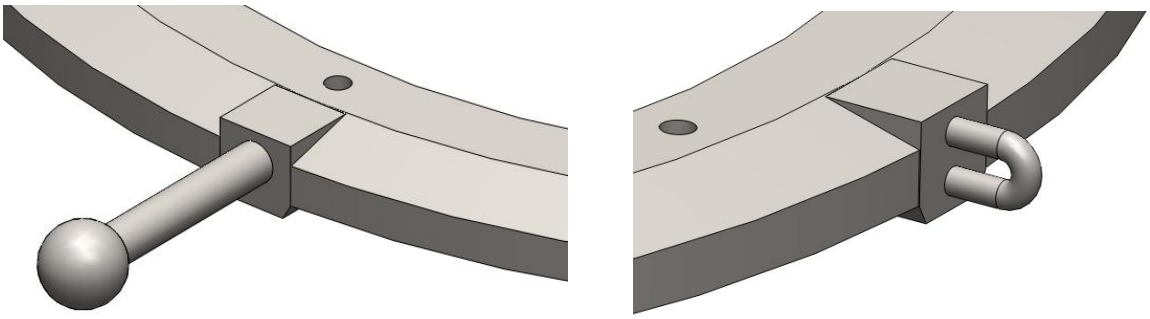

Figure 10 - Lifting Lug and Steering Hook

4.2 Lock System

As the main frame is bolted on to the adapter, the adapter is locked on to the jig frame with an easy lock system. This lock is shown in Figure 11. The connection has to withstand the rotational forces from test procedures as well as the variable loadings during assembling. To relieve the rotational forces from the locks, the adapter has eight extruded brackets that fit notches in the top frame of the jig as shown in Figure 11. These forces are vertical, bending and circumferential during test because of the rotation and elevation of the weapon.

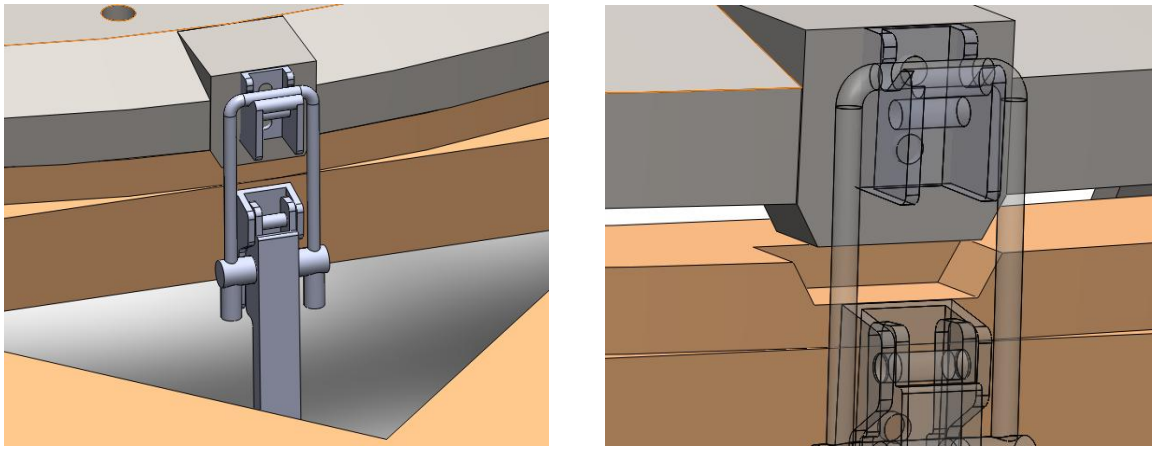

Figure 11 - Lock System and Extruded Bracket

© BUC, Kongsberg, Production Technology

The lock is a toggle clamp with an adjustable draw latch. This allows a fitting tolerance and load adjustment. The toggle clamp has 14 mm of adjustment and is fitted with multiple lock nuts. Technical drawings of the toggle clamp and draw latch is described in more detail in the appendix, section D03.1-4. [7]

4.3 Top Frame

The top frame of the jig is made from three layers of steel frames. The first is four rectangle tubes welded to form a square. The second is eight square tubes welded to form an octagonal. On top, there is a circular massive steel frame. The three layers of steel frames are welded together for a stable support of the product. The top frame of the jig is shown in Figure 12.

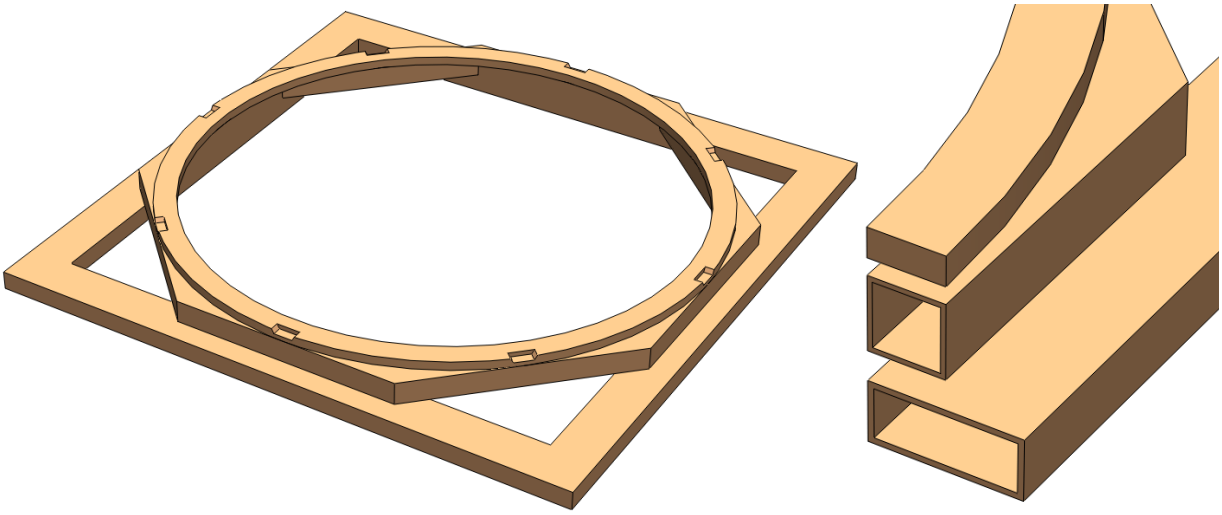

Figure 12 - Top Frame with Section View

The top frame has eight notches as shown in Figure 11. This is described in more detail in chapter 4.2. Technical drawings of the jig top frame is described in more detail in the appendix, section D02.

4.4 Lifting System

There are two main types of lifting cylinder technologies. These are hydraulic and ball screw. The hydraulic cylinders need a hydraulic system with an electrical motor, hydraulic pump and pipes. The ball screw needs only an electrical motor. To reduce cost, space, maintenance and components we will use the telescopic ball screw system. The reason for having a telescopic system is to satisfy the requirement of a minimum height of 600 mm and a maximum lifting height of 1400 mm (requirement K04.4-5). An illustration of a telescope ball screw is shown in Figure 13. The ball screw lifting systems will make the assembling more ergonomically, which covers the requirement of ergonomically use (requirement K04.12). Technical drawings of the telescopic ball screw is described in more detail in the appendix, section D11.

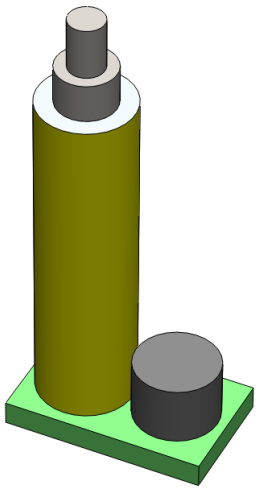

Figure 13 - Ball Screw Illustration

© BUC, Kongsberg, Production Technology

4.5 Telescopic support

Supporting telescopic legs will be at each corner of the jig. They will withstand the torque acting on the jig from the product rotational starts and stops, during the test (requirement K04.7). Each leg will consist of three square tubes, mounted inside each other to make a telescopic effect. Two steel plates are mounted on both sides of the telescopic leg for support. The plates are described in more detail in appendix D09. Technical drawings of the telescopic support is described in more detail in the appendix, section D04-D08. Standard sizes are gathered from NorskStaal AS. [1]

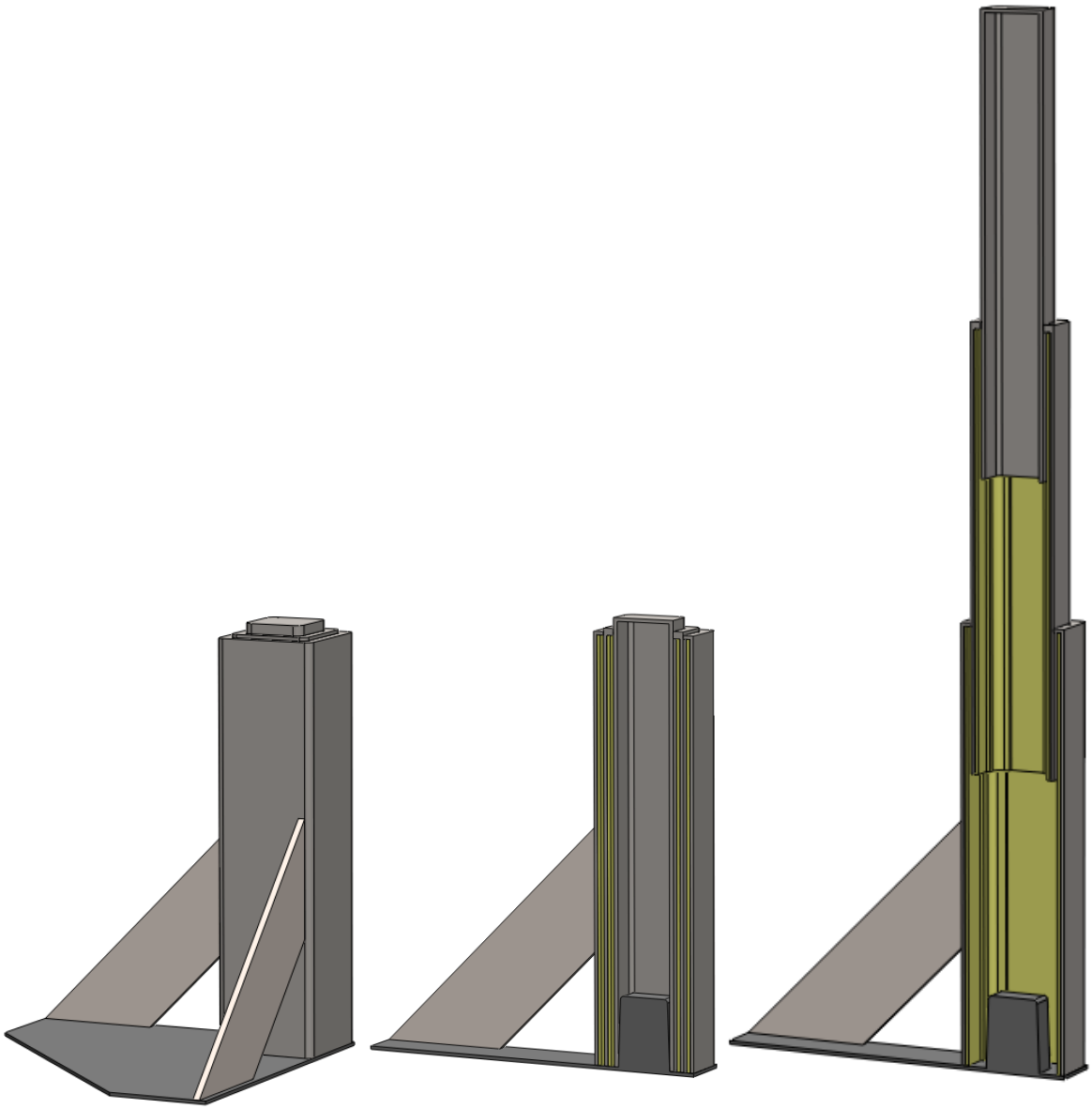

Figure 14 - Telescopic Leg Support

The telescopic legs as shown in Figure 14 are built up of three sleeves with sliding rails made of a plastic material. The sliding rails are mounted in between the sleeves to make it easy for the sleeves to slide up and down. The telescopic legs can be elevated from 625 mm, up to 1430 mm at max height. The two outer sleeves are made with a small edge on the top, for protecting the sliding rails and to drag the sleeves upwards as shown in Figure 14. The inner sleeve has a fully

© BUC, Kongsberg, Production Technology

closed lid on top of the sleeve, the reason for that is because this is the part that will be welded together with the top frame of the jig. The telescopic leg will be supported by a bottom plate which will be bolted to the ground for holding the jig stable (requirement K04.13). Inside the telescopic leg there is a wedge welded to the bottom plate for supporting the telescope when it is lowered to the ground. This wedge supports the inner tube during test procedures. Technical drawings of the floor mounting is described in more detail in the appendix, section D10.

4.6 Part List

Table 2 shows a list of all parts in the jig. Figure 15, shows all parts with part number in an exploded view.

Table 2 - Jig Assembly Part List

Part no.	Description	Appendix no.	Quantity
1	Adapter	D01	1
2	Top Frame	D02	1
3	Toggle Clamp	D03.1-4	4
4	Inner Sleeve	D04	4
5	Inner Slide Rail	D05	4
6	Middle Sleeve	D06	4
7	Outer Slide Rail	D07	4
8	Outer Sleeve	D08	4
9	Ball screw	D11	4
10	Brackets	D09	8
11	Base Plate	D10	4

© BUC, Kongsberg, Production Technology

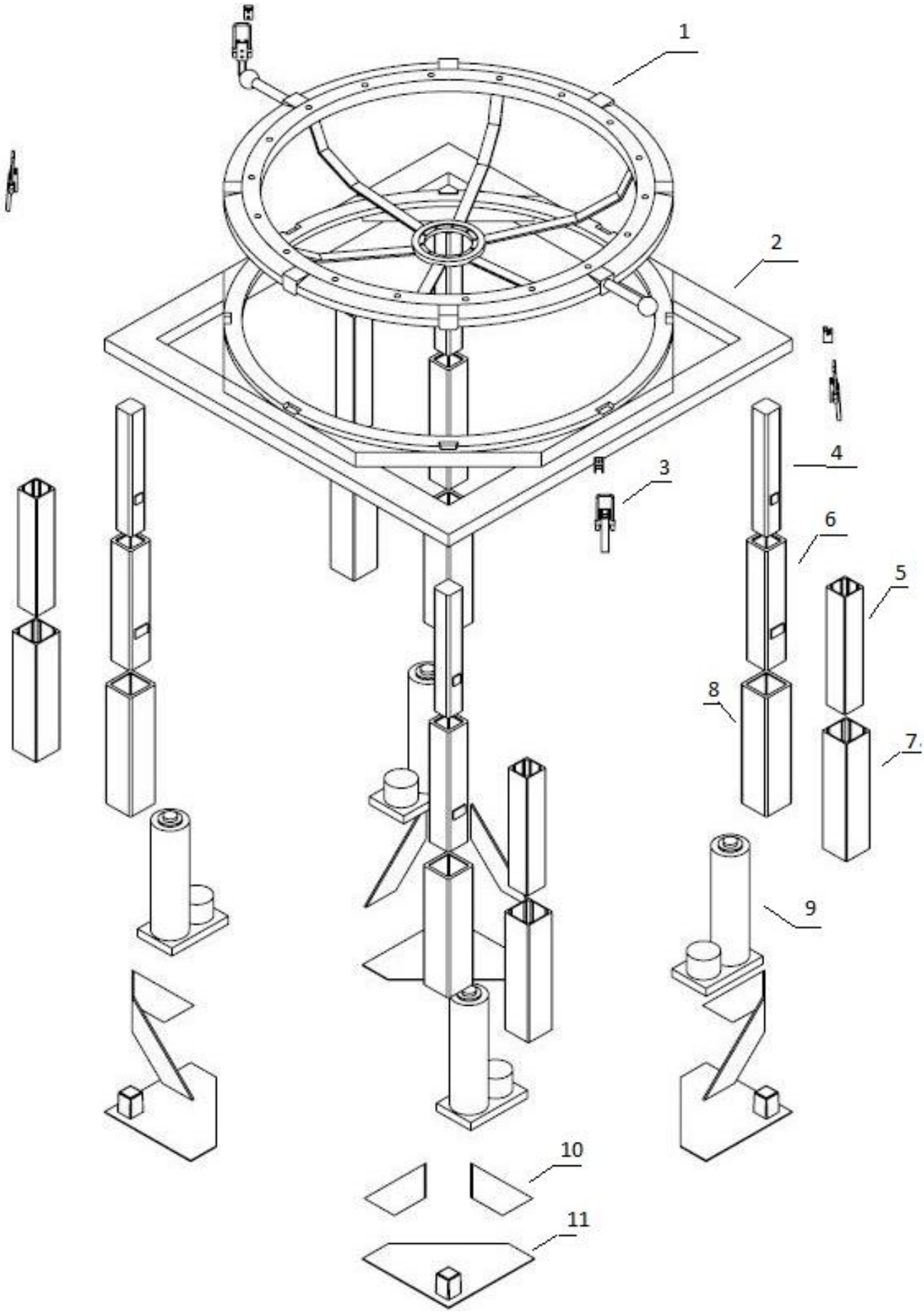

Figure 15 - Jig Assembly Exploded View

© BUC, Kongsberg, Production Technology

4.7 Materials

For the selection of materials for the jig, we have considered three main factors:

- Cost
- Processing / manufacturing requirements
- Service conditions

To make the construction of the jig as easy as possible and to keep the cost low we will mainly use standard parts.

The factors listed in Table 3 provide a concise list of properties which has been considered when choosing suitable materials.

Table 3 - Factors Affecting Material Selection

Cost	Mechanical	Non-mechanical	Surface
Material costs	Density	Thermal properties	Oxidation & Corrosion
Process costs i.e. casting, extrusion etc.	Modulus and Damping	Electrical properties	Friction
Working costs i.e. forging, pressing etc.	Yield strength	Magnetic properties	Abrasion
Machining costs	Tensile strength	Optical properties	Wear
Jointing costs	Fatigue strength		
Finishing costs	Fracture toughness		
Availability	Hardness		
Quantity required	Thermal fatigue resistance		
Selling price target	Creep resistance		

The telescopic supports, base plate, jig top and adapter will be of the same material to ensure easy material order. By study and comparing materials that would be strong enough for this application, we found that EN 10 083-1 (34CrNiMO6) or AISI 4340 was a sustainable material for the parts mentioned above. Material properties are listed in Table 4.

© BUC, Kongsberg, Production Technology

Table 4 - Material Table for AISI 4340 [2]

Physical Properties	Metric	English	Comments
Hardness, Vickers	228	228	Converted from Brinell hardness.
Tensile Strength, Ultimate	745 MPa	108 000 psi	
Tensile Strength, Yield	470 MPa	68 200 psi	
Elongation at Break	22 %	22 %	
Reduction of Area	50 %	50 %	
Modulus of Elasticity	205 GPa	29 700 ksi	Typical for steel
Bulk Modulus	140 GPa	20 300 ksi	Typical for steel.
Poisson's Ratio	0.29	0.29	Calculated
Machinability	50 %	50 %	Annealed and cold drawn. Based on 100% machinability for AISI 1212 steel.
Shear Modulus	80 GPa	11 600 ksi	Typical for steel.

Sliding rails

Inside of the supporting legs we have in cooperation with KPS, chosen sliding rails of a plastic material to guide and support the square tubes. The profiles are mounted on the inside of the outer tube and the middle tube.

The profile has to withstand the forces acting on the supporting legs and have low friction-coefficient for smooth operation. High Density Polyethylene (HDPE) has good mechanical strength and low friction coefficient. Material properties are listed in Table 5. HDPE is often used as sliding rails, bearings, gears and propels. In consulting with a plastic company in Sweden (PLASTEX) we got confirmation that this material is fit for this application.

Table 5 - Excerpt of Material Table for HDPE [3]

Mechanical Properties	Metric	English
Young's modulus	600 – 1400 MPa	87 023 - 203 053 psi
Shear modulus	700 – 800 MPa	101 526 - 116 030 psi
Tensile strength	20 - 32 MPa	2 901 – 4 641 psi
Elongation	180 – 1000 %	180 – 1000 %
Fatigue	18 - 20 Mpa	2 611 - 2 901 psi
Bending strength	20 - 45 MPa	2 901 - 6 527 psi
Impact strength	0.27 - 10.9 J/cm	0.506 - 20.4 ft-lb/in

© BUC, Kongsberg, Production Technology

5 Structure Analysis

As a preparatory study for an analysis of the jig, we have calculated the stresses that act on the jig under the most extreme conditions. If the jig can withstand the most extreme scenarios of real operation situations, it will also withstand any forces in normal operation.

For the jig, the most extreme scenarios will be during the test, since the RWS is in rotation. When using the jig as an assembly jig, the stresses acting on it will be bending stress due to variable center of gravity while assembling and stresses due to the weight of the jig. These stresses will not be taken into consideration since they will affect the lifting system. The lifting system shall withstand this when it is properly dimensioned.

When the RWS is in a rotational operation, the most extreme scenario would be an uncontrolled emergency stop. This can be due to activated sensors, i.e. the pressure sensitivity safety mat. If an uncontrolled emergency stop occurs, the RWS will from full rotational speed, stop after 0.5 seconds. With a maximum speed of 90 degrees per second around its center, this equals a rotation of 45 degrees before it stops when moving at maximum speed. The moment of inertia at the center of mass, equals 2355.524 kg m^2 at the rotational axis. The center of mass is in the middle of the jig and the unit. This value is collected from KPS. With the moment of inertia we find the torque acting on the jig when the deceleration occurs. First we need to calculate the deceleration. Then we multiply this number with the moment of inertia and the result is the torque. This is shown in the following equations:

$$\omega = angular\ velocity, max = \ 0.5\pi\ \frac{rad}{sec} = 90\ {}^{deg}/_{sec}$$

$$\omega_0 = angular\ velocity, min = 0$$

$$t = time\ before\ total\ stop = 0.5\ sec$$

$$I = moment\ of\ inertia = 2355.524\ kgm^2$$

$$\alpha = angular\ deceleration = \frac{\omega - \omega_0}{t} = \frac{0.5\pi - 0}{0.5}\ sec^{-2} = \pi\ sec^{-2}$$

$$\tau = I * \alpha = \ 2355.524\ \mathrm{kg}\ m^2 * \ \pi\ sec^{-2} = 7400.097\frac{kgm^2}{s^2} = 7500\ Nm$$

These equations results in a torque of 7400.097 Nm. As a safety margin we will use 7500 Nm in the following analysis as the torque. We want to check the equations above to see if they are approximately what we should expect. Just as an experiment we will look at the RWS as a solid cylindrical body like the one in Figure 16. The equation for the moment of inertia around the z-axis for a solid cylinder is:

$$I = \frac{1}{2}mr^2$$

© BUC, Kongsberg, Production Technology

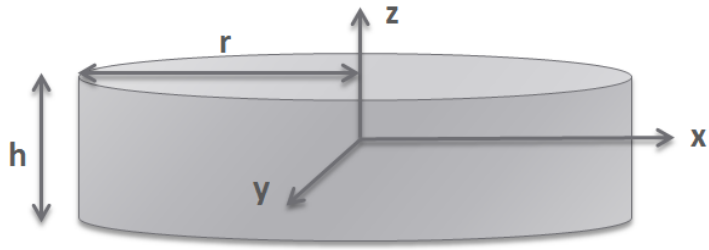

Figure 16 - Cylindrical Body with Coordinates

The mass, m, of the RWS is 3280 kg and the greatest diameter of the RWS is d = 2500 mm. This gives a radius of 1.25 m. With these values, the approximately torque will be:

$m = 3280\ kg$

$r = 1.25\ m$

$\tau = \mathrm{I} * \propto = \frac{1}{2} m r^2 * \pi\ sec^{-2} = \frac{1}{2} * 3280\ kg * 1.25^2\ m^2 * \pi\ sec^{-2} = 8050.33\ Nm$

This result of 8050.33 Nm is close to our previous result of 7500 Nm. Since the radius of the RWS is 1.25 m at the widest part only, and the mass is placed in its center, we can conclude that our previous calculations with a torque of 7500 Nm is reliable.

Beside this torque, the mass of the RWS and the adapter ring will lead to a force orientated vertically down at the jig. This force will act on the jig construction, and the lifting system while testing. The lifting system will not be able to withstand the torque, and we will therefore suppress this part while running the analysis. As a result of this we will only run FEM analysis on the jig construction and without the lifting system. The jig shall be in its lowest position under test procedures. With this, it should not be any problems regarding the forces due to the weight of the RWS. The RWS weighs 3280 kg and the adapter weighs 377 kg, calculated from the properties of the material described in section 4.7 (AISI 4340). By using the gravity constant equal 9.81 m/s^2 the force due to gravitational weight will be:

$F = (m_{RWS} + m_{Adapter}) * g = (3280 + 377)\ kg * 9.81\ m/s^2 = 35\ 875.17\ N$

As a safety margin we will use 36 000 N as the vertical force due to gravity in the following analysis.

© BUC, Kongsberg, Production Technology

5.1 FEM Analysis

This chapter, FEM analysis, is the main part of the chapter Structural Analysis. We will briefly describe this analysis with a discussion of the results. Our FEM analysis is simulated in SolidWorks Simulation. SolidWorks is one of many major software-developers within this field. The FEM analysis will be a static analysis using the force and torque acting on the jig at the most extreme scenarios. A dynamic analysis will not be present due to limits in both software and experience.

The FEM analysis demands a vast amount of data-capacity. We have therefore divided the jig in four sections and simulate one of the sections. The results are not affected by this, as we use symmetry functions in the calculation in the software. The lifting system will be suppressed and not present in the analysis as mentioned in the introduction to this chapter. The top of the jig is simplified to reduce the need of data-capacity. The top frame is shown in purple in Figure 17. The simplification will not affect the analysis because the forces and torque is applied directly on the top of the jig. The simulated model is shown in Figure 17. The inputs for the software, to use in the analysis are divided as follow:

- Materials
- Mesh
- Fixtures
- External loads

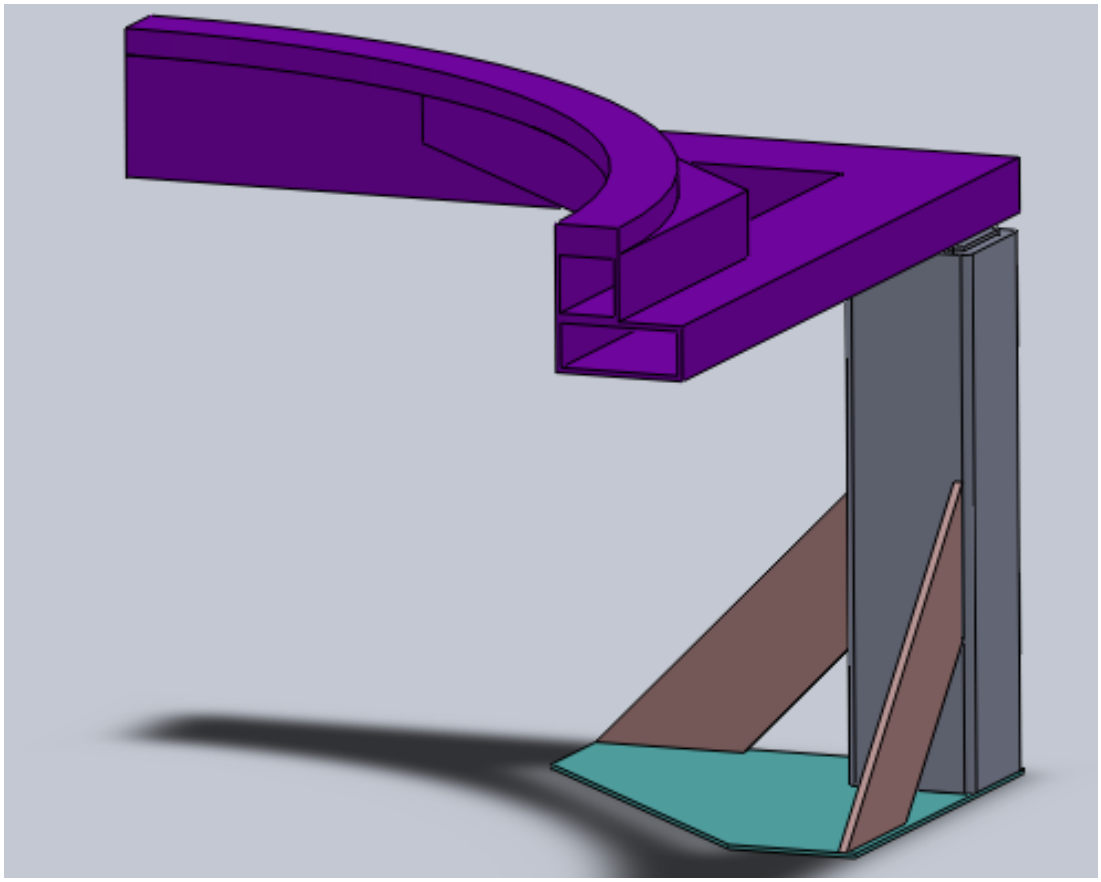

Figure 17 - Simulation Model

© BUC, Kongsberg, Production Technology

Materials

First we need to define the material of each part of the jig. As mentioned in the chapter of materials, all parts, except the sliding rails will be EN-10 083-1 or AISI 4340. This material is predefined in SolidWorks, meaning that the material properties already exist in a data-sheet. The material properties used in this simulation is shown in Figure 18.

Property	Value	Units
Elastic Modulus	2.05e+011	N/m^2
Poisson's ratio	0.285	N/A
Shear Modulus	8e+010	N/m^2
Density	7850	kg/m^3
Tensile Strength	745000000	N/m^2
Compressive Strength in X		N/m^2
Yield Strength	470000000	N/m^2
Thermal Expansion Coefficient	1.23e-005	/K
Thermal Conductivity	44.5	W/(m·K)
Specific Heat	475	J/(kg·K)

Figure 18 - Material Properties, AISI 4340 Steel, Annealed

The sliding rails are extruded in High-Density Polyethylene (PEHD) as described in chapter 4.7 of materials. The material properties used in the simulation is shown in Figure 19.

Property	Value	Units
Elastic Modulus	2.05e+011	N/m^2
Poisson's ratio	0.285	N/A
Shear Modulus	8e+010	N/m^2
Density	7850	kg/m^3
Tensile Strength	745000000	N/m^2
Compressive Strength in X		N/m^2
Yield Strength	470000000	N/m^2
Thermal Expansion Coefficient	1.23e-005	/K
Thermal Conductivity	44.5	W/(m·K)
Specific Heat	475	J/(kg·K)

Figure 19 - Material Properties, PEHD

Mesh

The next step of the analysis is to define the mesh for the model. A mesh is a set of nodes that will be used during the simulation. A fine-grained mesh will give a more accurate result, but also demand more data-capacity. In this simulation, the mesh is set as a mid-value between a fine-grained and coarse mesh for the whole model. The mesh parameters are shown in Figure 20.

© BUC, Kongsberg, Production Technology

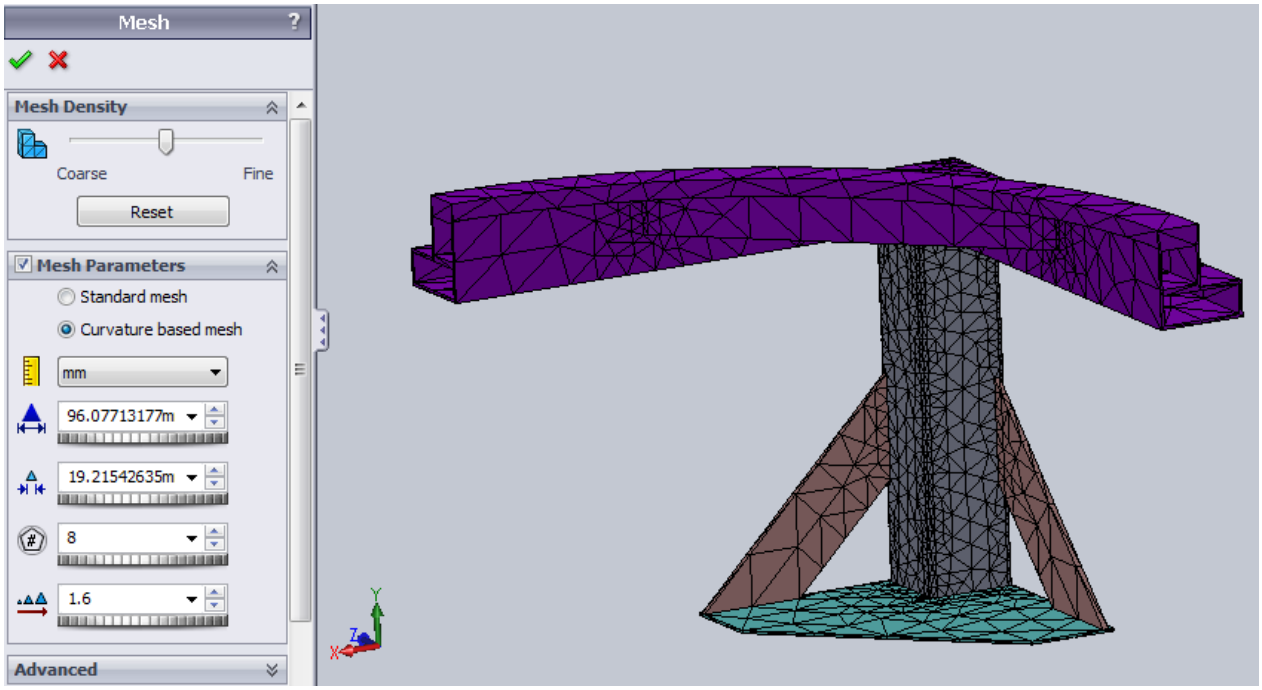

Figure 20 - Mesh Parameters

We use a fine-grained mesh for the inner sleeve by using a function named “mesh-control”. This is to get a more accurate result for this part. The reason for choosing the inner sleeve is because this part will be exposed for a concentration of stresses, since it is the connection between the top of the jig and the telescopic legs. The mesh parameters used in the analysis is shown in Figure 21.

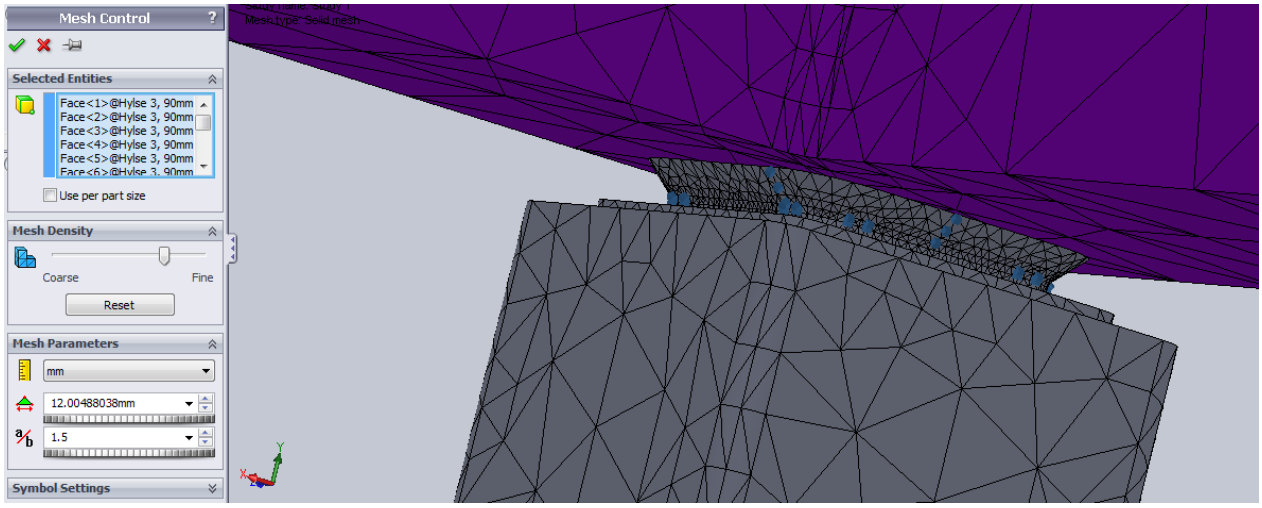

Figure 21 - Mesh Control

Fixtures

Another step of the analysis is to define how the jig is connected or fixed to its surroundings. In our case there will be two fixtures. The first is a fixed geometry which represents the connection between the jig and the floor. The jig is to be tightly fastened to its ground support. The model is therefore fixed at its base plate to simulate this. The geometry fixture is shown in Figure 22.

© BUC, Kongsberg, Production Technology

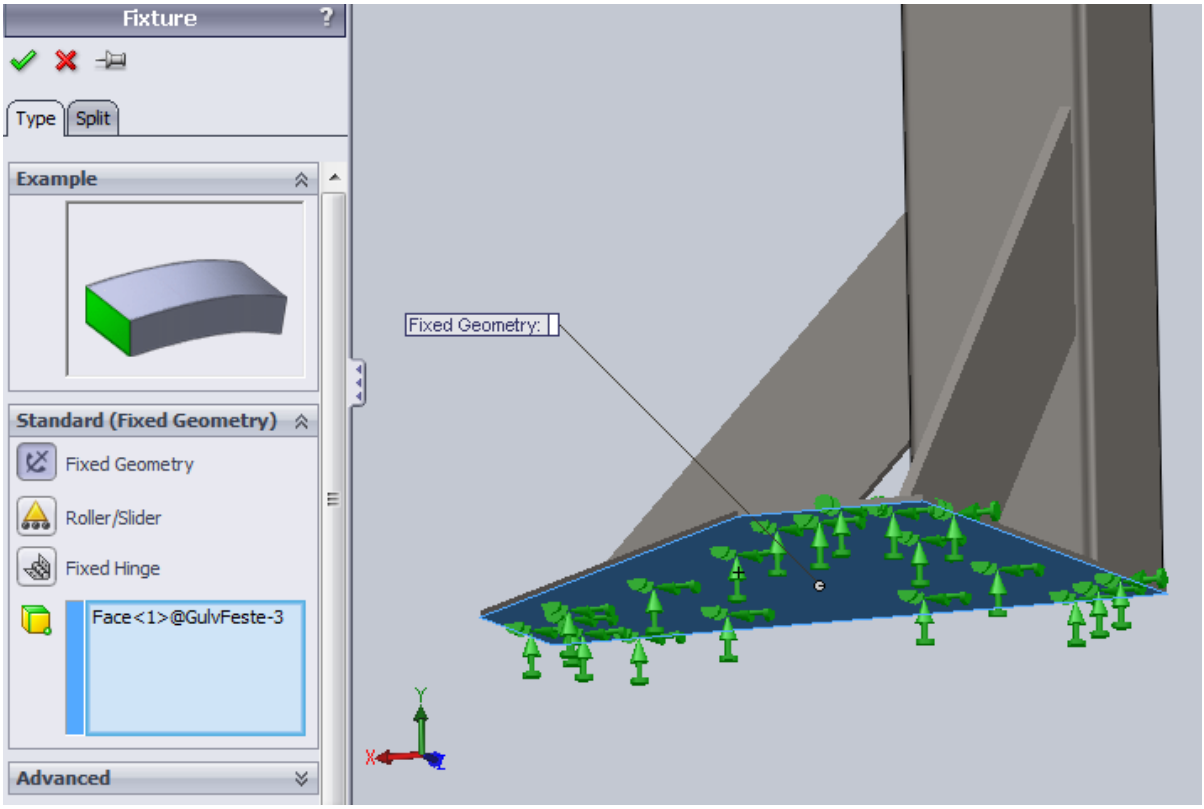

Figure 22 - Fixed Geometry

The other fixture is a symmetry fixture due to the split in the model. As mentioned earlier this is done to spare some data-capacity. By adding this fixture-function, the simulation model takes this into consideration in the calculation. This symmetry fixture is applied where the structure is cut, as shown in Figure 23.

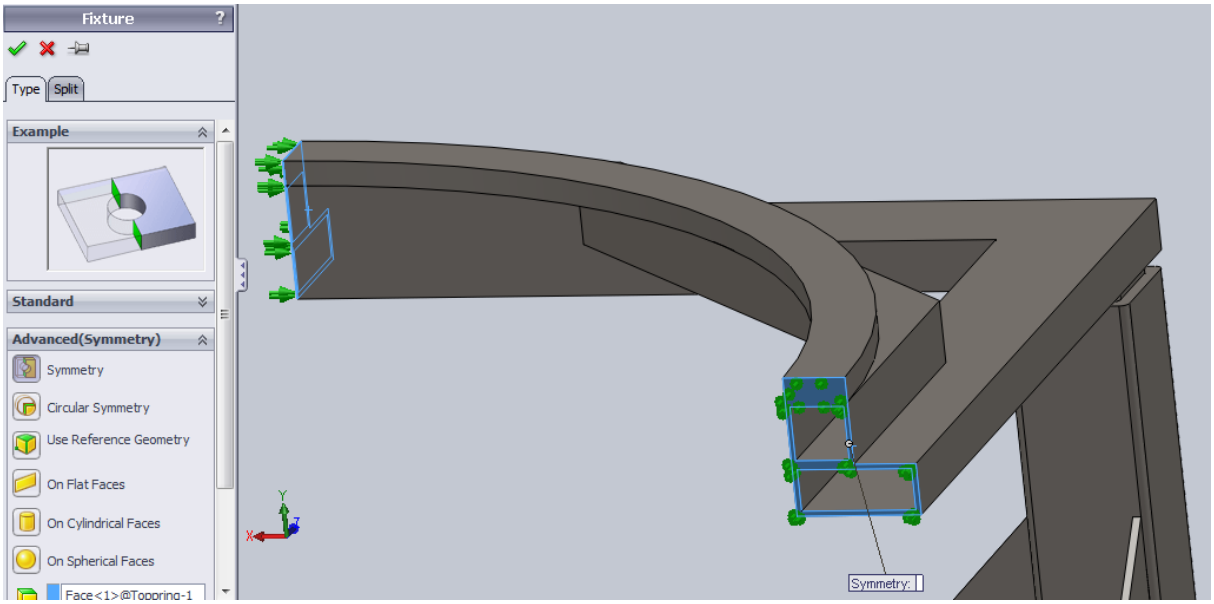

Figure 23 - Symmetry Fixture

External Loads

There will be two sets of external loads applied to the model in our simulation. These two loads are calculated in Chapter 5.The external loads are therefore applied to the model in separate ways. The first applied load is the weight force due to gravity. This force is calculated to be 36 000 N for the whole model, leaving 9000 N for one fourth of the model. This force will be applied directly and vertically down on the top of the model, which is the connection between the jig and the adapter. This section is highlighted in blue in Figure 24. The forces are shown with purple arrows in Figure 24.

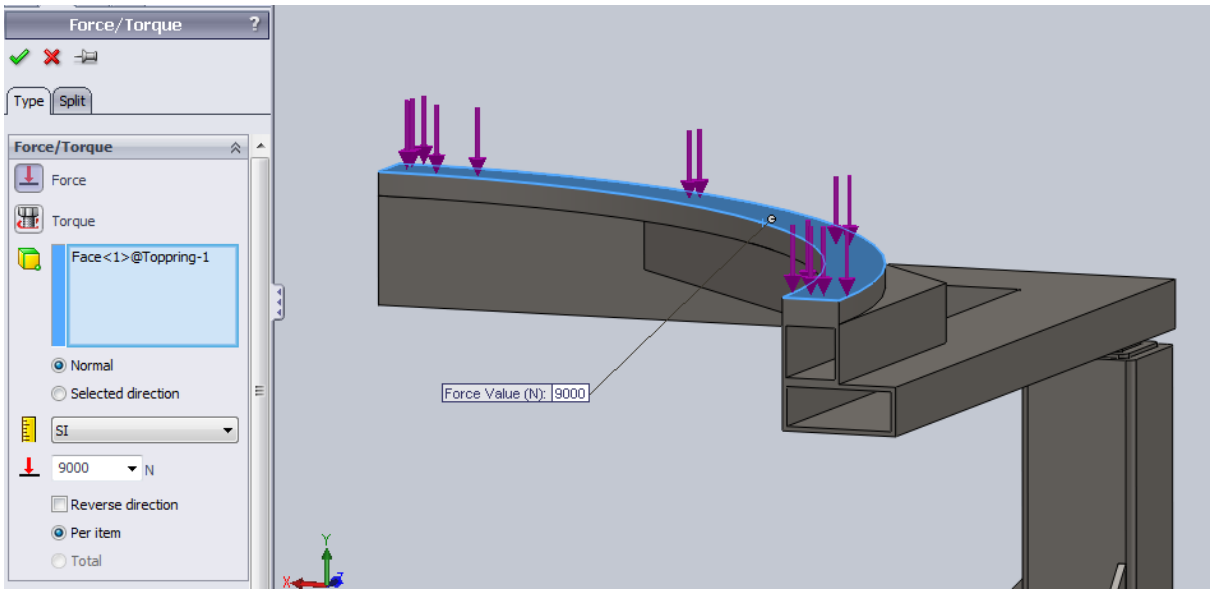

Figure 24 - External Load, Force

The other external load will be the torque. As calculated earlier, this torque equals 7500 Nm. The torque is applied parallel with the blue highlighted face in Figure 25. The rotational axis will be in the direction of the y-axis on the coordinate system in the left corner of Figure 25. This is the same direction as the pink highlighted face in Figure 25. The torque will therefore act in the direction of the purple arrows in Figure 25.

© BUC, Kongsberg, Production Technology

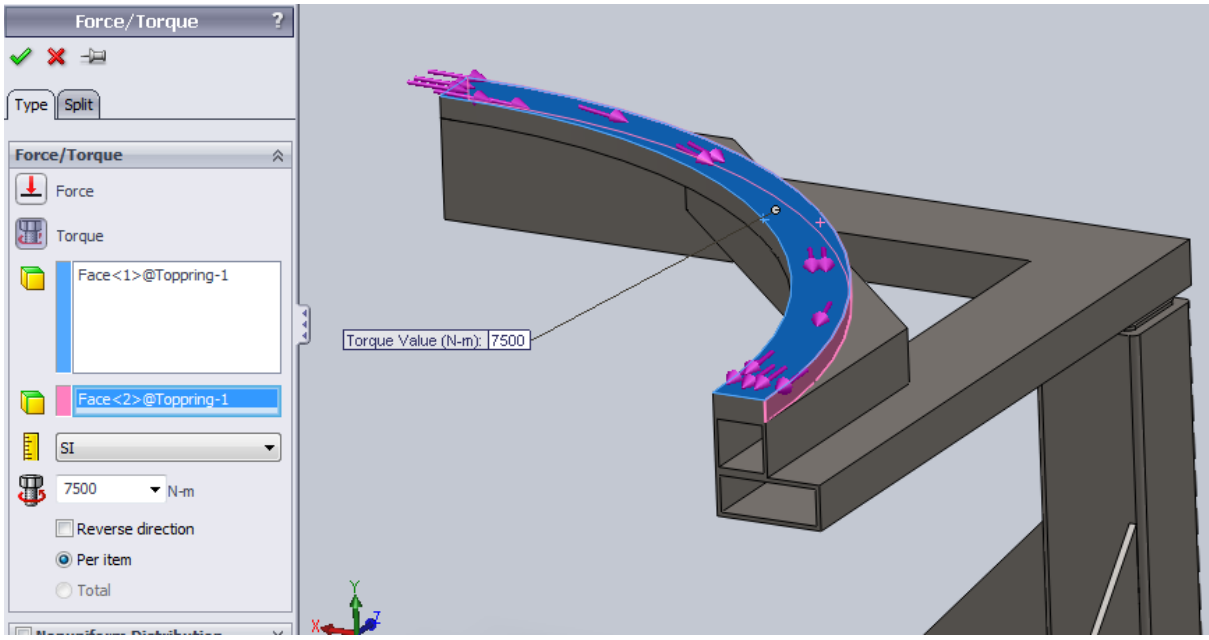

Figure 25 - External Load, Torque

5.2 FEM Analysis – The Result

Von Mises stress

The result of the analysis regarding maximum von Mises stress is shown in Figure 26. Von Mises is one theory of calculating the equivalent stress, which can be compared to the yield limit of the material to find the factor of safety. The factor of safety is a number which represent the relationship between yield strength and von Mises, giving a safety margin if the number is above one.

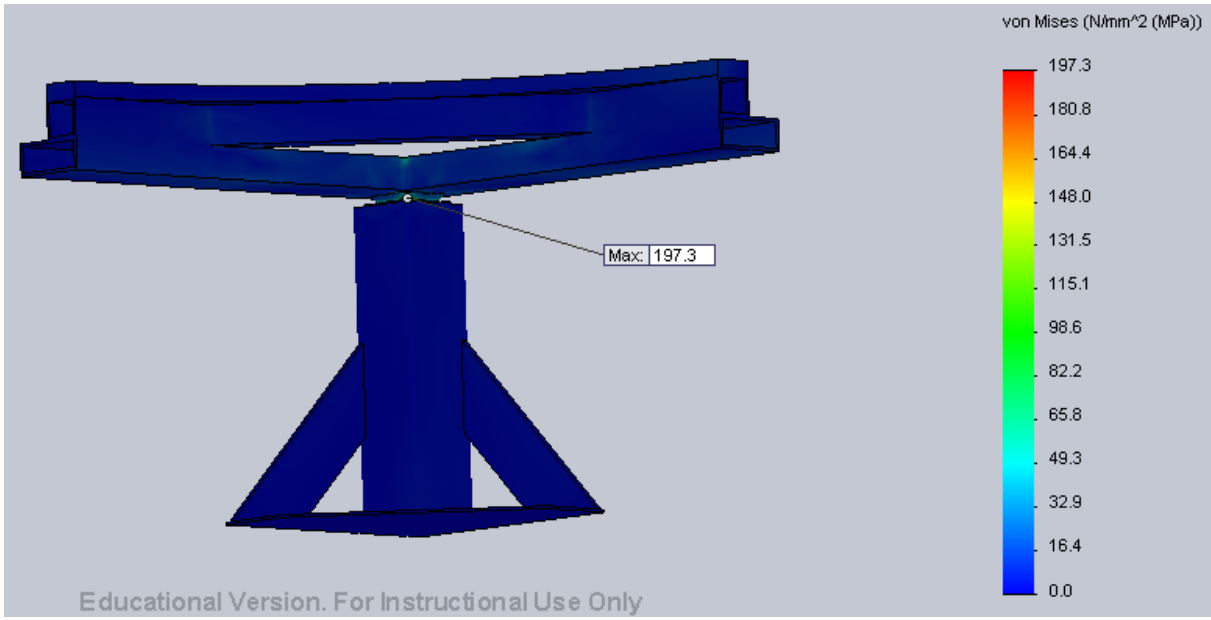

Figure 26 - Max von Mises Stress

Figure 26 shows the area of maximum von Mises stress. The stresses are concentrated in the area where the leg is connected to the top of the jig. This area is shown in Figure 27, where the red spot represent the highest amount of stresses.

© BUC, Kongsberg, Production Technology

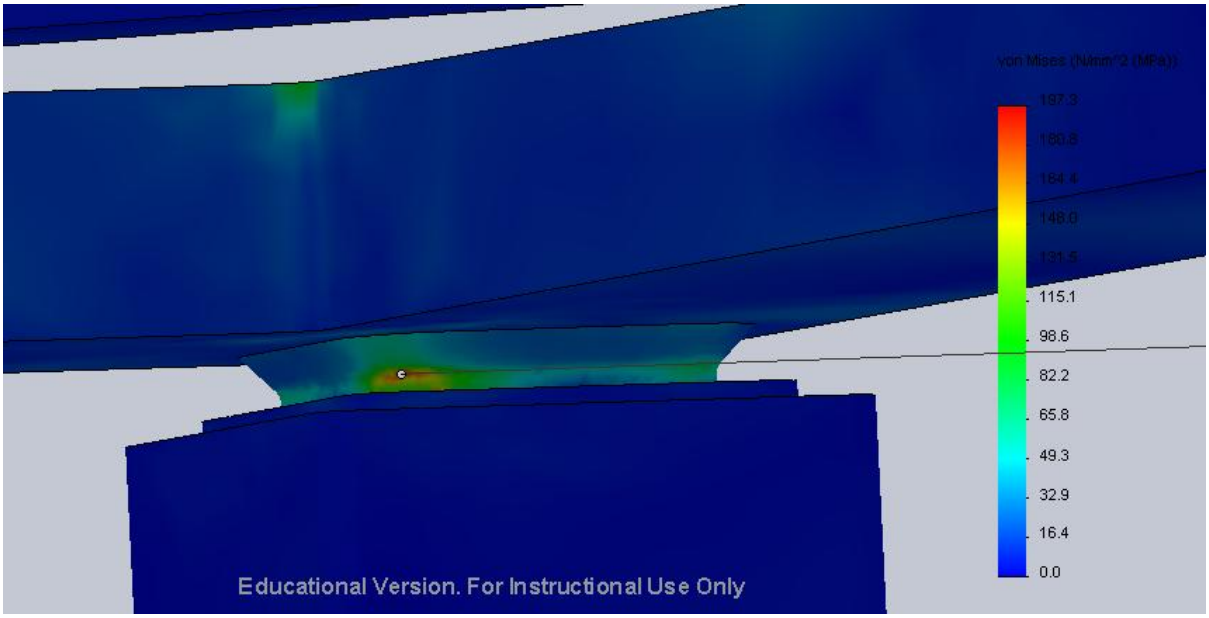

Figure 27 - Max von Mises Stress, Zoom

When using a tool named "ISO-clipping" we can easily see the affected areas in contour of the structure. In Figure 28 we choose to visualize von Mises stress equal 33 MPa and above. The figure shows a great amount of stress at the top of the connection in the square tube. This is due to a concentration of stresses where the model has an abrupt transition in the structure (sharp edges). The torque also gives a higher amount of stresses at the inner top compared to the other three corners of the top frame. These stresses are due to the relationship $F_t = \frac{\tau}{r}$. The distance, r, is shorter where the stresses are higher. F_t is, as described in chapter 5.3, the force perpendicular to the rotation. It is also due to the gravitational force that acts on the top ring of the jig, as it tries to bend down the center of the jig. This is illustrated in Figure 29. The scale of strain is not true; it is 200 times true scale for illustration.

The weldment and the structure of the inner sleeve get the highest amount of stresses, 197.3 MPa. This is due to the rotational forces trying to tear the top frame from its connections to the legs. The stresses will have the highest value at the outer surface at the inner side of the sleeve for the same reason as mentioned above.

© BUC, Kongsberg, Production Technology

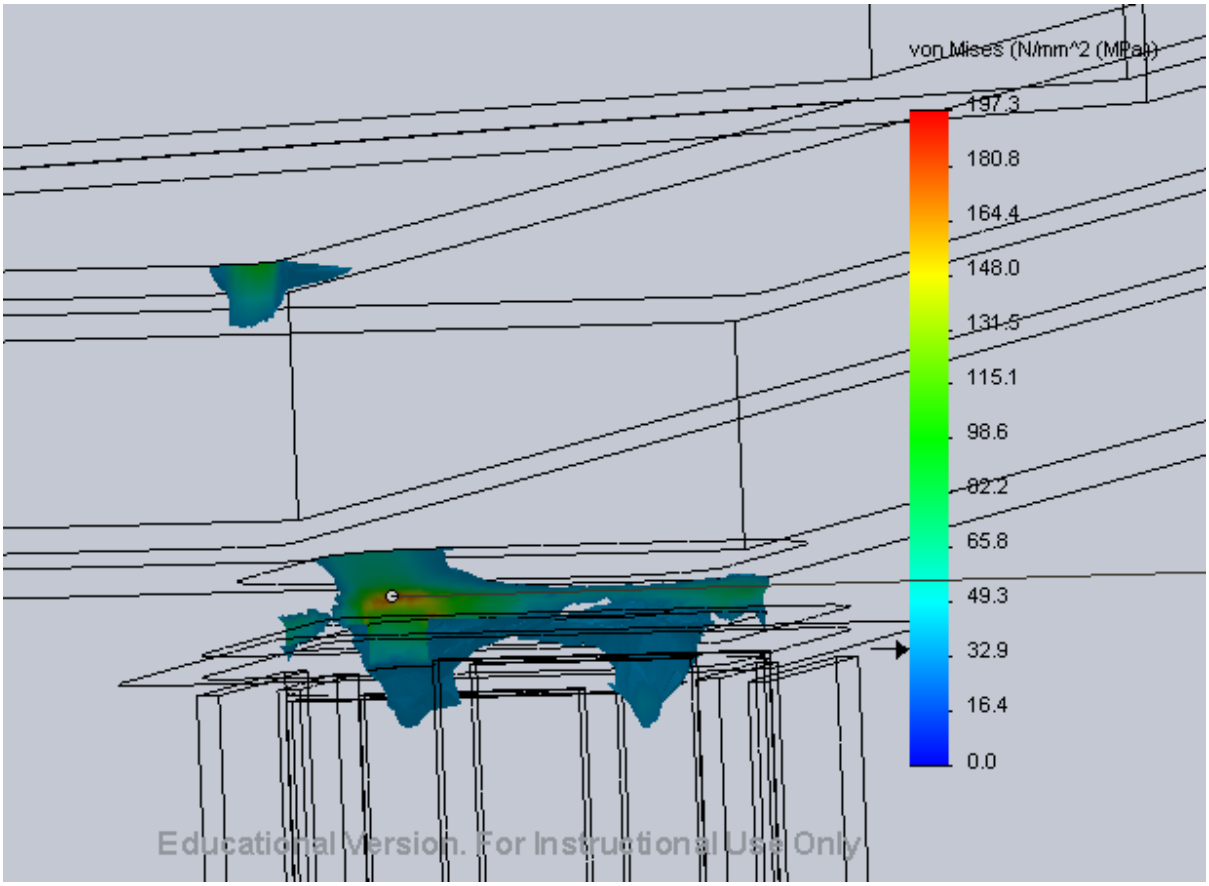

Figure 28 - Max von Mises Stress, ISO Clipping 1

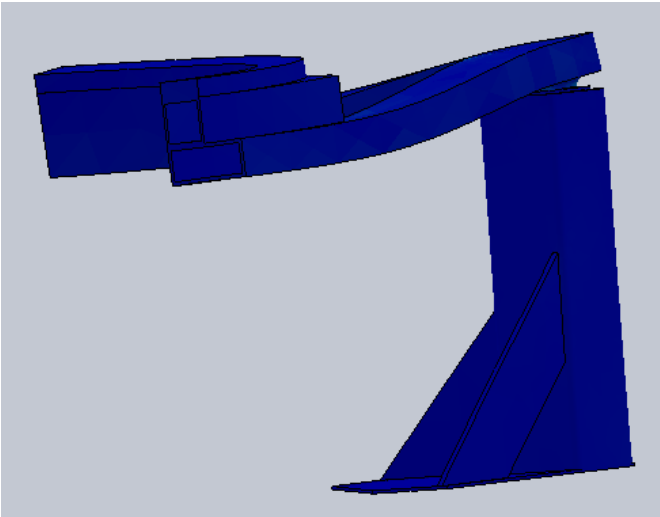

Figure 29 - Strain

In Figure 30 we see that the stresses propagate in the structure of the inner sleeve. This is naturally due to the torque and gravitational force trying to bend the top of the jig.

Since the maximum von Mises stress equals 197.3 MPa, we get a factor of safety equal:

$$n = \frac{470\ MPa}{197.3\ MPa} = 2.38$$

A factor of safety above 2 is acceptable.

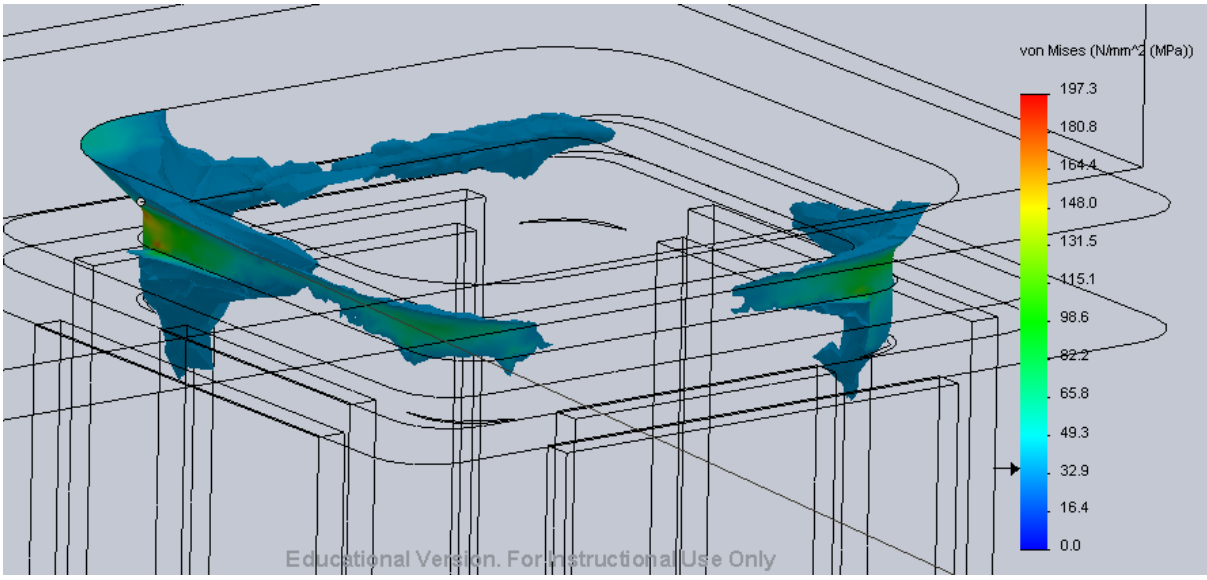

Figure 30 - Max von Mises Stress, ISO Clipping 2

Displacement

Figure 31 shows the displacement in a scale 200 times the true scale to show where it reacts. The maximum displacement is less than 0.5 mm due to elastic stretch in the material. The highest displacements occur at the top frame where most of the elastic stretch propagates. This is also acceptable.

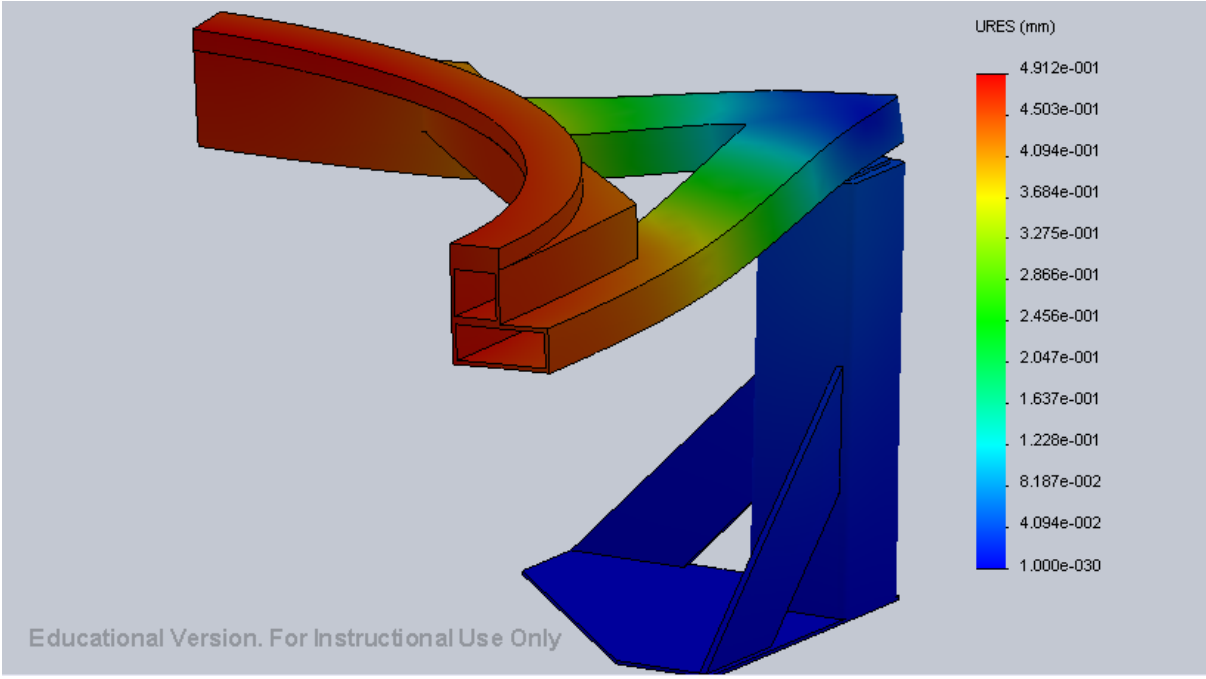

Figure 31 - Displacement

Fatigue

It is concluded that the model will withstand the stresses with a safety factor of 2 in relation to the yield strength. Another aspect of concern is fatigue. This can occur if the model is exposed for variable stresses, meaning compression and tension stresses in repeats. A fatigue fracture can occur if subjected to a load below the yield strength after a number of cycles. Microscopic cracks will begin to form at the surface, and a crack will start growing after repeats of variable

© BUC, Kongsberg, Production Technology

stresses. Some materials have their own fatigue limit or endurance limit, which is the lowest value for a fatigue fracture to occur, regardless of the number of cycles with variable stresses. We use the material AISI 4340 for our model. AISI 4340 have an endurance limit of 450 MPa. [4] We do not need to worry about fatigue fractures since the model will be subjected to stresses beneath 197.3 MPa. This requires of course the jig to be produced as the model in our simulation, meaning that the surfaces need to be smooth with no sharp corners etc. Irregularities will lead to elevated local stresses where fatigue cracks can initiate.

Conclusion

By running a FEM-analysis of a construction subjected for external loads, it is evident whether the construction has the strength to withstand the stresses caused by the external loads, or not.

In this case we have simulated the most extreme condition, where the product has a sudden stop during the rotational test. As we can see from the results of the FEM-analysis, the most crucial part of the jig is the inner sleeve of the telescopic support. Because of the sudden change in geometry (weld) the stresses (197.3 MPa) is concentrated at the outer surface at the inner side of the sleeve. This is due to the rotational forces trying to tear of the top frame from its connections to the legs. Since the maximum von Mises stress equals 197.3 MPa, and the AISI 4340 has a yield strength equals 470 Mpa, we get a factor of safety equal to 2.38. This factor is acceptable and tells us that the construction is dimensioned to withstand the acting stresses.

5.3 Welding

As described in chapter 4, several parts of the jig will be welded together. Welds are usually not a part of an FEM analysis because it demands a great amount of data capacity. The welds shall therefore not be a crucial part of the structure, which means a fracture due to high stresses shall not occur in the welds before the structure itself. We want to take this into consideration and will therefore calculate the minimum size of the weld to withstand the stresses as mentioned in the previous chapter. We are going to calculate the weld connecting the four telescopic legs to the frame of the jig. This is the weld that is facing the most extreme forces. The weld can be seen in Figure 32.

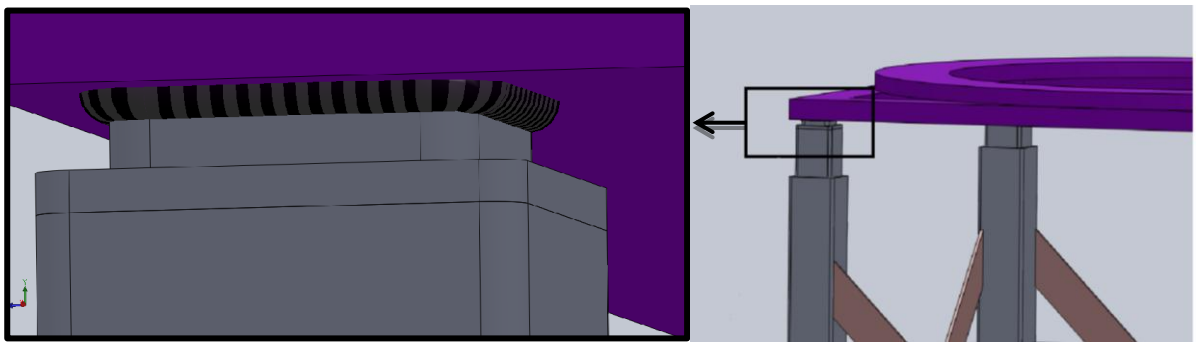

Figure 32 - Weld Location

© BUC, Kongsberg, Production Technology

First of all we need to find the forces that act on the weld. The forces that act on the weld are due to the torque. The torque about the axis of rotation due to F_t is the function $\tau = F_t\ r$, were r, is the distance from the center. The force F_t will act in the direction of the rotation, perpendicular to the line r. This relationship is shown in Figure 33.

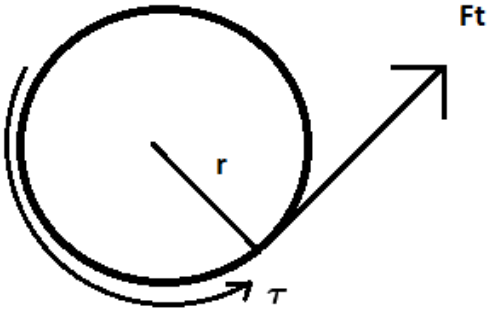

Figure 33 - Torque Illustration

The force, F_t, will in turn, affect the welds along the z and y-axis in separate ways. When calculating stresses in welds, we need to look at the impact of the area in the middle of the weld, as shown with an arrow in Figure 34.

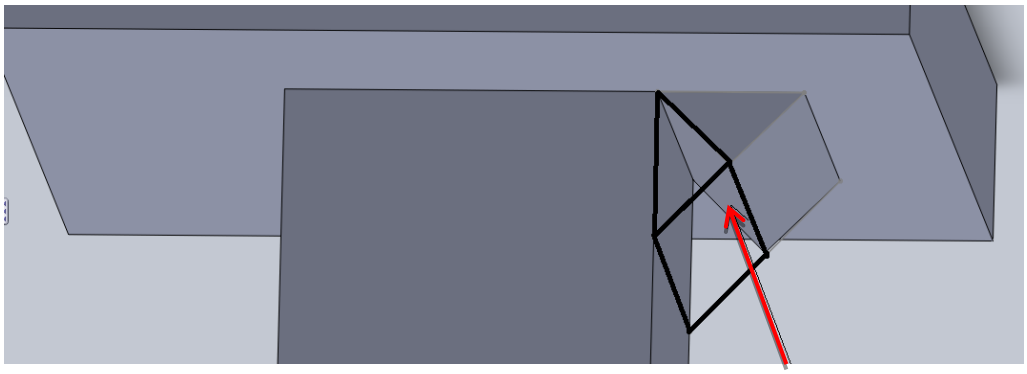

Figure 34 - Illustration, Weld 1

This area is illustrated in light grey at the model in Figure 35; it is the same area as marked in black in Figure 34, seen from above without the top connection. The components of the force F_t, $F_{t,z}$ and $F_{t,y}$, is shown in Figure 35.

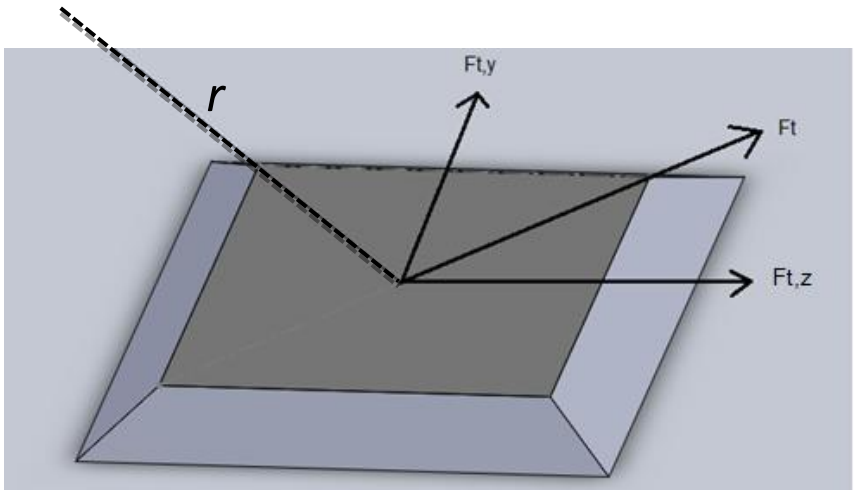

Figure 35 - Illustration, Weld 2

© BUC, Kongsberg, Production Technology

We use r = 1308 mm as the distance from the middle of the jigs origin, to the center of the weld as shown in Figure 35. From this, we solve the following equation:

$$F_t = \frac{\tau}{r} = \frac{7500\ Nm}{1.308\ m} = 5734\ N$$

The component forces are given by the following equation:

$$F_{t,z} = F_{t,y} = \cos(\frac{\pi}{4}) * F_t = \cos(\frac{\pi}{4}) * 5734\ N = 4054.55\ N = 4055\ N$$

We also need to determine the height (x-axis), since the torque is due to moment of inertia of the RWS. The height of the RWS is 688 mm, and the height of the top at the jig is 167 mm as seen in Figure 36. By selecting a midpoint in the RWS as the center of gravity in z-direction, the distance from the weld to the two component forces will be as follow:

h = 688/2 + 167 mm = 511 mm

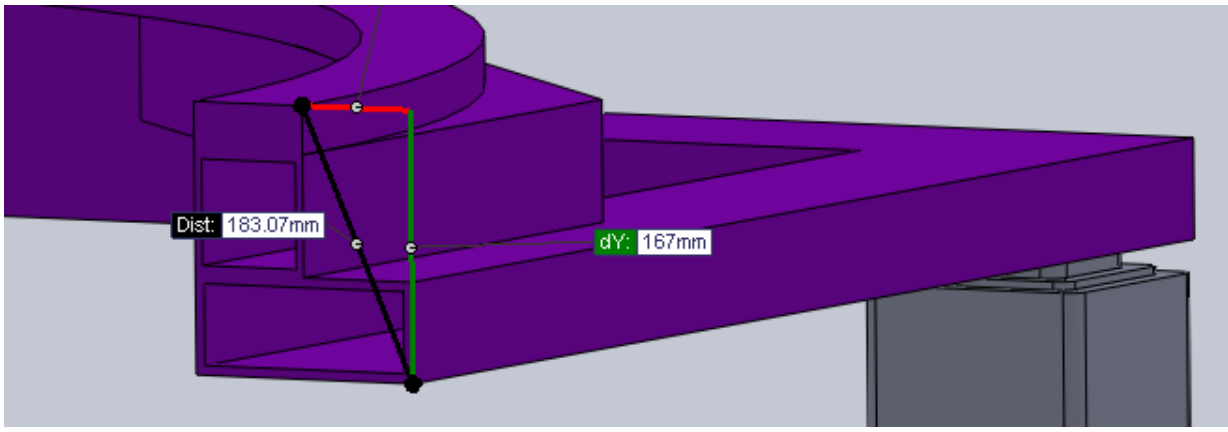

Figure 36 - Jig Height

Since this weld is going all the way around the connected parts, we need to evaluate where the most stresses will occur to do the calculation. As described in the result of the FEM-analysis, the most von Mises stresses will occur at the weld / sleeve facing against the center of the jig. We chose the face that lies parallel with the y-axis and facing the center of the jig. This is done since both welds along the z and y-axis, are exposed for the same amount of forces. The weld is shown in red in Figure 37, at the left of the green contour, representing the sleeve structure. The impact area is marked with a red string in the weld; the letter "a" represents the width of the weld. With a width of a, the length (x) of the two sides of the weld will be:

$(2a)^2 = x^2 + x^2 \rightarrow x = \sqrt{2a^2}$, due to Pythagoras theorem.

The blue arrows represent the load (F), stresses (σ) and their distance from the weld.

Figure 37 summarize the previous discussions:

- F1 = F_x = 9000 N is due to weight of the RWS with a distance 850 mm to the center of RWS (directly along the z-axis).
- F2 = $F_{t,z}$ = 4055 N is due to the rotational torque with a distance 511 mm to the top of the weld.
- F3 = $F_{t,y}$ = 4055 N is same as F2, but facing along the y-axis (into the figure).
- σ (F2, b) and σ (F3, b) is facing up in the figure and are due to bending from the forces F2 and F3.

© BUC, Kongsberg, Production Technology

- σ (F2) is facing to the right and are due to displacement from the force F2.
- σ (F1, b) and σ (F1) is facing down in the figure and are due to the force F1, both bending and displacement.

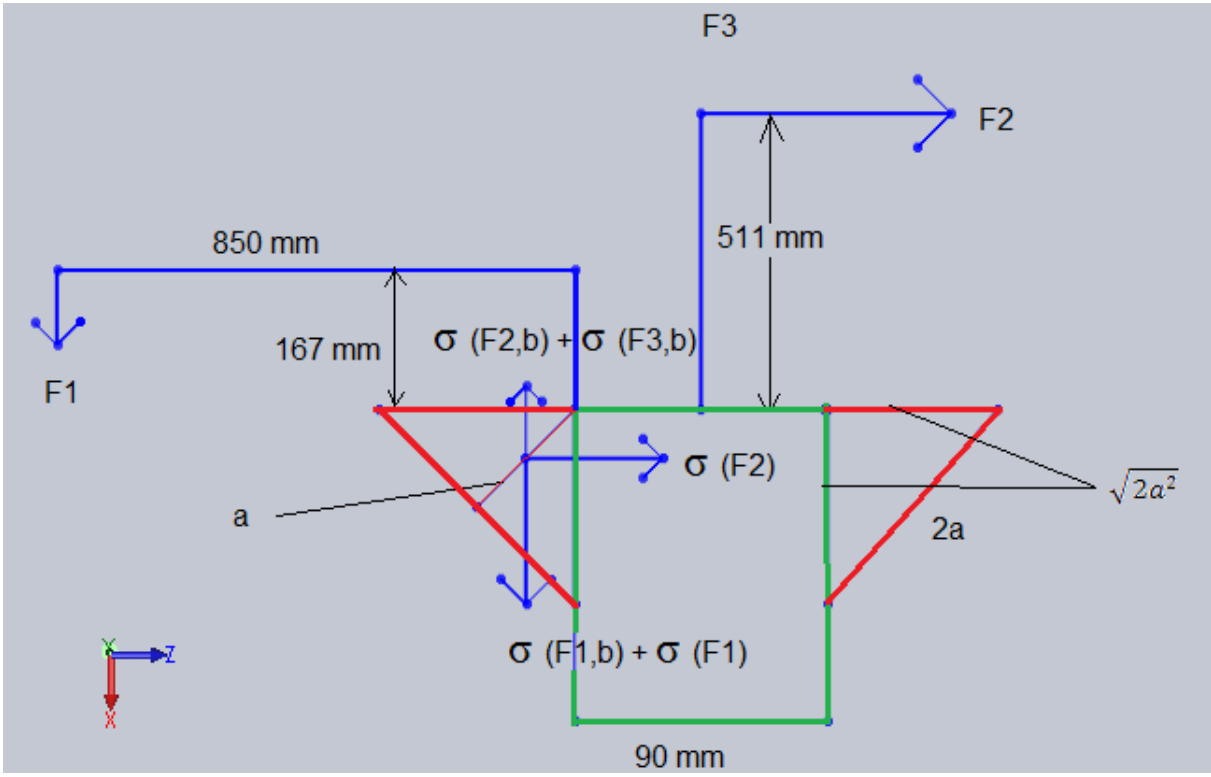

Figure 37 - Loads on Weld

Before we can calculate, we need to define some equations for stresses. The equation for calculating bending stress is:

$$\sigma_b = \frac{M_b * y}{J_{xx}} = \frac{F * d * y}{J_{xx}}$$

In this equation M_b is the bending moment due to a force, F, and the distance, d, from where it acts. J_{xx} is the second moment of area. The calculation of J_{xx} is shown in Figure 38 and is calculated by the shape of the whole weld, not only the one we are looking at.

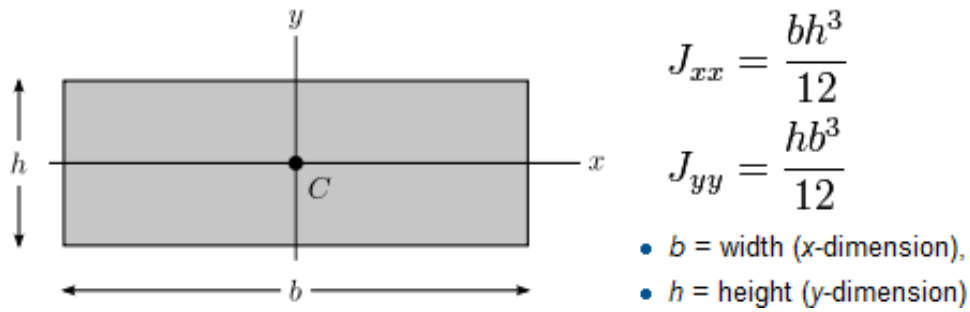

Figure 38 - Second Moment of Area of Rectangular Cross Section [5]

The equation for calculating stress due to displacement is:

$$\sigma = \frac{F}{A}$$

In this equation F is the force acting the displacement stress and A is the impact area of the whole weld, not only the one we are looking at. Our calculation shows as follow:

$$J_{xx} = \frac{(90 + 2a)^4 - 90^4}{12}$$

We must adjust the second moment of area, since the weld arrangement makes a hollow square in the center. The letter a, is the width in the area of impact in the weld.

$$\sigma_{F1,b} = \frac{M_b * y}{J_{xx}} = \frac{9000 * 850 * (167 + a)}{\frac{(90 + 2a)^4 - 90^4}{12}}$$

$$\sigma_{F2,b} = \sigma_{F3,b} = \frac{M_b * y}{J_{xx}} = \frac{4055 * (511 + \sqrt{2a^2}) * (45 + a)}{\frac{(90 + 2a)^4 - 90^4}{12}}$$

$$\sigma_{F1} = \frac{F}{A} = \frac{9000}{(90 + 2a)^2 - 90^2}$$

$$\sigma_{F2} = \frac{F}{A} = \frac{4055}{(90 + 2a)^2 - 90^2}$$

In addition to these stresses, there will be a displacement stress due to the force F3 lying parallel with the area of impact. This force will only impact the two welds parallel with the direction of F3 (y-axis). Due to calculation rules, the length of the weld (90 mm) needs to be adjusted with 2 times a. The stress is therefore:

$$\sigma_{F3} = \frac{F}{Ab} = \left(\frac{4055}{2 * (90 - 2a) * a}\right)$$

The calculation of equivalent stress in a weld needs to be described before we can calculate the next step. The stresses used in calculation of equivalent stress in a weld are shown in Figure 39.

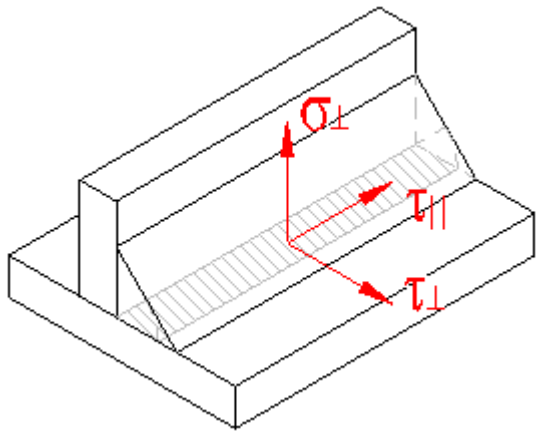

Figure 39 - Weld, Stress [6]

The stresses in Figure 39 have the following relation:

$$\sigma_e = \sqrt{\sigma_{\perp}^2 + 3\tau_{\perp}^2 + 3\tau_{||}{}^2}$$

In this calculation $\tau_{||}$ equals σ_{F3}, $\tau_{\perp}$ will not be present and the relation between $\sigma_{\perp}$ is shown in Figure 40.

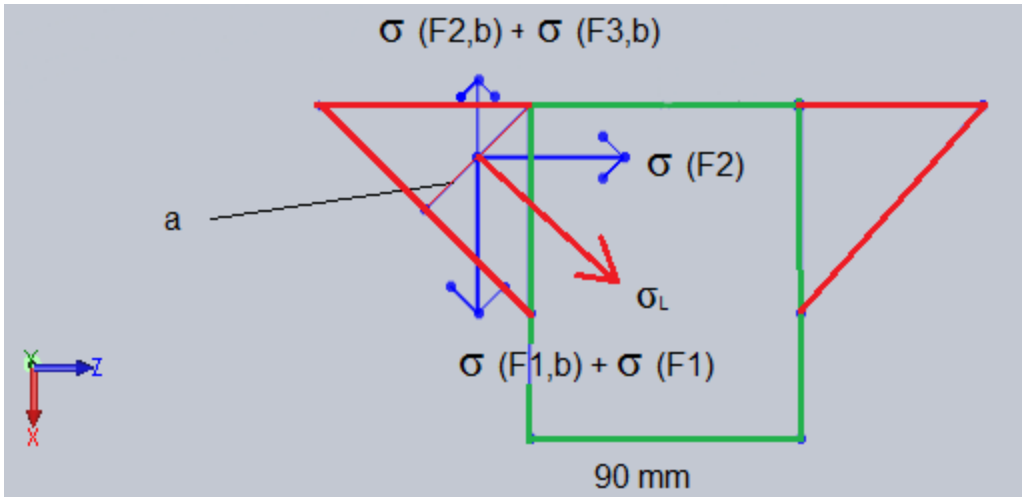

Figure 40 - Stresses on Weld

With Figure 40 in mind the equation for equivalent stress becomes:

$$\sigma_e = \sqrt{\sigma_{\perp}^2 + 3\tau_{\perp}^2 + 3\tau_{||}{}^2} = \sqrt{\left(\left(\left(\sigma_{F1,b} + \sigma_{F1}\right) - \left(\sigma_{F2,b} + \sigma_{F3,b}\right)\right)^2 + (\sigma_{F2})^2\right) + 3\sigma_{F3}{}^2}$$

In the following calculation we will use an equivalent stress equal 235 MPa as limit. The most welding material has a yield strength below 2 * 235 MPa = 470 MPa (AISI 4340), giving a factor of safety equal 2. We solve the following equation with respect to a:

$$\sigma_e = \sqrt{\left(\left(\left(\sigma_{F1,b} + \sigma_{F1}\right) - \left(\sigma_{F2,b} + \sigma_{F3,b}\right)\right)^2 + (\sigma_{F2})^2\right) + 3\sigma_{F3}{}^2} = 235\ MPa$$

$$= \sqrt{\left(\left(\left(\frac{9000 * 850 * (167 + a)}{\frac{(90 + 2a)^4 - 90^4}{12}} + \frac{9000}{(90 + 2a)^2 - 90^2}\right)\right) - \left(2\frac{4055 * \left(511 + \sqrt{2a^2}\right) * (45 + a)}{\frac{(90 + 2a)^4 - 90^4}{12}}\right)\right)^2 + \left(\frac{4055}{(90 + 2a)^2 - 90^2}\right)^2 + 3\left(\frac{4055}{2 * (90 - 2a) * a}\right)^2}$$

This gives a = 7.7 mm, concluding that the weld must have a width in the area of impact of 7.7 mm or more. Figure 41 shows the same weld in the model from the FEM analysis. By the measurements on the figure we get the following equation (using Pythagoras theorem):

$$a = \sqrt{2\left(\frac{10}{2}\right)^2} = 7.07 \text{ mm}$$

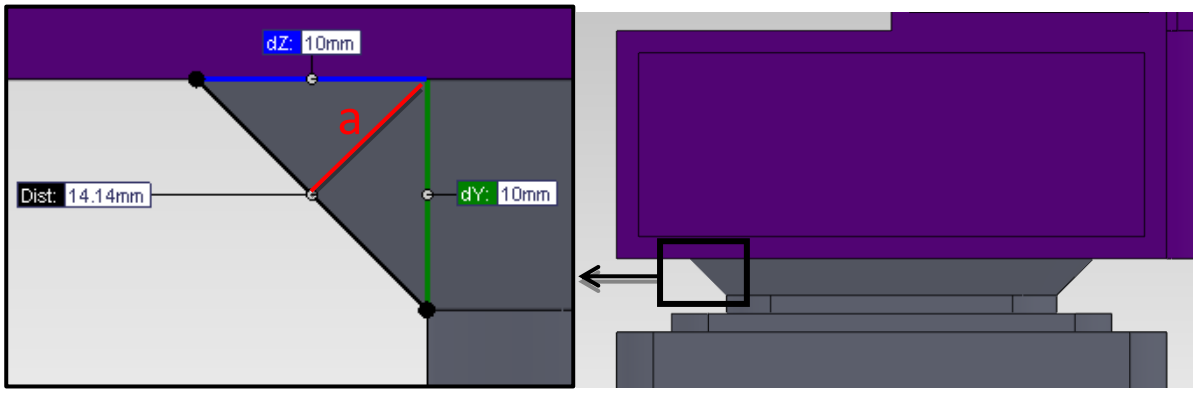

Figure 41 - FEM Weld Dimensions

The main reason for the difference is that the weld is excluded in the FEM analysis, meaning that the software calculate the “weld” as a part of the sleeve, and not two different parts. Therefore the result will not be according to calculation rules for welds. The calculation of the weld done in this chapter is calculated with the largest values possible, giving a result higher than necessary. This will only give a benefit of a higher factor of safety. It is also calculated with an equivalent stress of 235 MPa, and the analysis gives a result of 197.3 MPa.

© BUC, Kongsberg, Production Technology

6 Safety Operating Procedures

Safety is very important, especially around fully loaded jigs and during test operations. Because of this, we have to establish some rules, to make a safe environment. There is always a risk for accidents to occur during assembling and testing of heavy machinery. We have focused on all dangerous situations that could appear for both assembling and testing, caused by our jig design and operation procedures. To reduce the danger of accidents we established safety operation procedures.

We have divided the production area in two different safety levels, where we will secure the areas in different ways, depending on what is desirable.

6.1 Central Core

Central core are defined as the place where a person can interact with the product/jig when operating. This place has to be ensured with pressurized safety mats, so it won't be possible to operate the jig, or perform tests when the pressurized mats are tripped.

Pressure Sensitive Safety Mat:
Rockford pressure sensitive safety mats (Figure 43) are constructed of molded vinyl material. The molding covers two separated parallel steel plates. These plates make contact when the mat is stepped on. They have a black, ribbed pattern top surface to help prevent slipping and are easy to clean. The mats are active over the entire surface, except the narrow border.

This pressure sensitive safety mats will be placed under the jig at all stations, for safety of the personnel (requirement K04.11). When someone is working on the product, there will be no possibility for elevating the jig neither up nor down, and there will not be possible for running tests on the test area either.

Figure 43 - Pressure Sensitive Safety Mat

ESD protection:
Central core will also be ESD safe (requirement K03.3-04.1), in the central core workers are in touch with the product. And the jigs are powered by electricity that probably could provoke static electricity, which would not be convenient. All the jigs will be grounded, to prevent such failure. From this the jig will be ESD-safe. ESD-signs (Figure 42) are visible for operators and the production area is marked with ESD-tape on the floor.

Figure 42 - ESD Sign

© BUC, Kongsberg, Production Technology

6.2 Circumference Perimeter Radius

This area is the whole area from center to the tip of the rotating barrel of RWS. The area is only defined at test and backup station since the barrel doesn't rotate on the assembly station. At the test and backup stations there will be an enclosed fence, which will protect workers from the rotating barrel during test.

Magnetic Safety Switch:
On the door for the security fence, there will be a magnetic safety switch. If the door is opened, the switch will disconnect the power, and all type of activity inside the cage will stop immediately. As illustrated in Figure 44.

When the test is running, personnel is not allowed to be located inside the cage. On the test station the jigs elevation system will be connected to the RWS power connection system. The reason for this is to ensure that there is no possibility to start the tests, as long as the jig isn't standing in its lowest position. The telescopic legs are not designed to withstand the rotational forces acting from the product during test, besides when the jig stands in its lowest position.

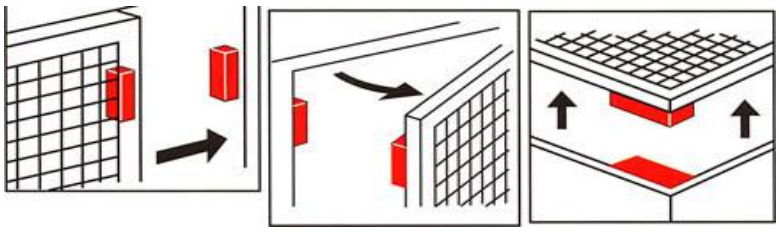

Figure 44 - Magnetic Safety Switch

Emergency Shutdown Button:
The fence door will be equipped with an emergency shutdown button with key lock. And at each test station there will be placed a "caution, maintenance in progress" sign (Figure 45) that shall be hung on the emergency button when someone is inside the cage doing either troubleshooting or maintenance. This is present to prevent any workers from turning on the test simulation.

Figure 45 - Emergency Shutdown Button with Caution Sign

© BUC, Kongsberg, Production Technology

7 Cost Estimation

To get a view of the procurement cost for the jig we have found approximately prices for each set of parts. The costs are illustrated in Table 6. Preparation cost is not included in this estimation.

Table 6 - Cost Estimation for One Complete Jig

Part no	Description	Appendix no	Quantity	Approximately procurement cost
1	Adapter	D01	1	68 000 NOK[8] *
2	Top Frame	D02	1	34 000 NOK[8] *
3	Toggle Clamp	D03.1-4	4	1000 NOK [8] *
4	Inner Sleeve	D04	4	2000 NOK[8] *
5	Inner Slide Rail	D05	4	1000 NOK*
6	Middle Sleeve	D06	4	3000 NOK[8] *
7	Outer Slide Rail	D07	4	1200 NOK*
8	Outer Sleeve	D08	4	3600 NOK[8] *
9	Ball screw	D11	4	100 000 NOK [9]*
10	Brackets	D09	8	4000 NOK[8] *
11	Base Plate	D10	4	2000 NOK[8] *
				219 800 NOK

**Approximately prices*

© BUC, Kongsberg, Production Technology

8 References

1. NorskStaal AS: *Product catalog*
   http://www2.norskstaal.no/varekatalog/varekatalog.aspx
   (Downloaded: 16.05.12)
2. *Aerospace specification metals, AISI 4340*
   http://asm.matweb.com/search/SpecificMaterial.asp?bassnum=M434AA
   (Downloaded: 12.05.04)
3. Matbase.com. *Data Table for: Polymers: Commodity Polymers: HDPE*
   http://www.matbase.com/material/polymers/commodity/hdpe/properties
   (Downloaded: 12.05.04)
4. Davidson, Thomas. (1999). *An introduction to Failure Analysis for metallurgical Engineers.* http://www.tms.org/Students/Winners/Davidson/Davidson.html#table23
   (Downloaded: 12.05.04)
5. Wikipedia.org. *Second moment of area.*
   http://en.wikipedia.org/wiki/Second_moment_of_area
   (Downloaded: 12.05.04)
6. Mitcalc.com. *Welded connections.*
   http://www.mitcalc.com/doc/welding/help/en/weldingtxt.htm
   (Downloaded: 12.05.04)
7. Protex.com. *Heavy duty adjustable latch/overcenter fastener/toggle fastener/draw latch*
   http://www.protex.com/product/show/name/490-9000!170 (Downloaded: 16.05.12)
8. NorskStaal AS: *Steel prices*
   http://smithers.idium.no/norskstaal.no/filestore/Prislister/Prislister_mai_2012/Stl1304 2012_v2.pdf
   (Downloaded: 16.05.12)
9. Mekanex AS, Torsten Edlund, M.Sc Application & Product Manager, www.mekanex.se

© BUC, Kongsberg, Production Technology

9 Abbreviations

Abbreviation	Description
Assem.	Assembly
ESD	Electrical Static Discharge
FEM	Finite Element Method
g	gram
BUC	Buskerud University College
ID	Identification
ISO	Isometric
Kg	Kilo gram
KPS	Kongsberg Protech Systems
MPa	Mega Pascal
m	Meter
NA	Not Applicable
N	Newton
Nm	Newton meter
no	number
PEHD(HDPE)	High Density Polyethylene
r	radius
Rev.	Revision
RWS	Remote weapon station
Sec	Second

© BUC, Kongsberg, Production Technology