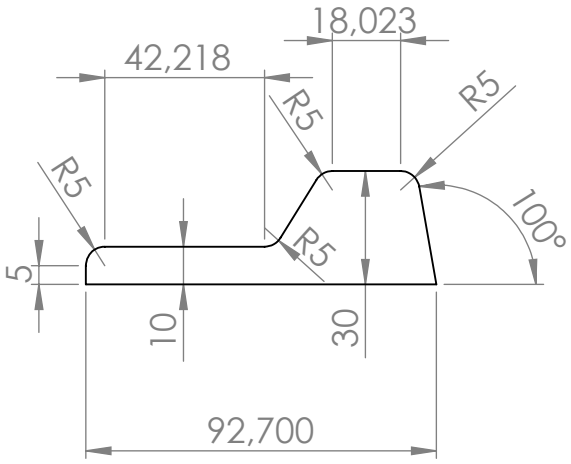

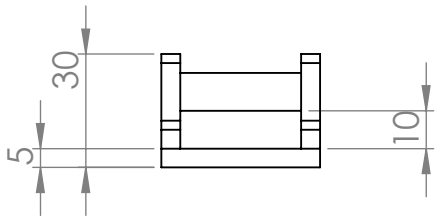

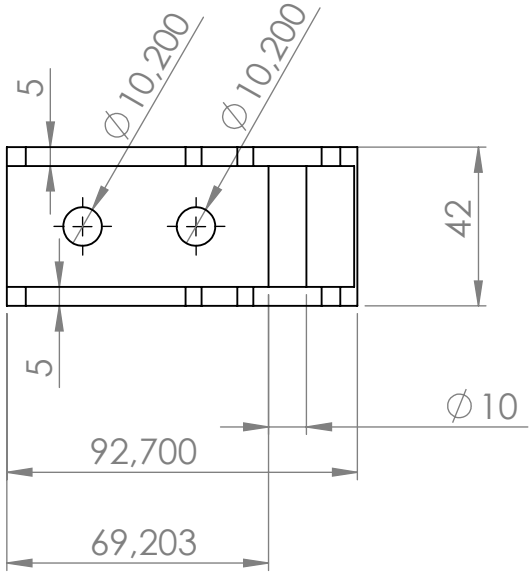

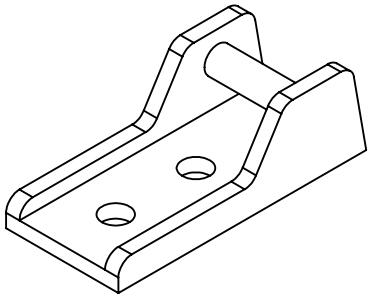

TITLE: D03.2 Lock Part			
DESIGNER: Production Technology		DATE 2012-05-19	
All dimentions are in milimeter	SCALE: 1:1	SHEET 1 OF 1	A4