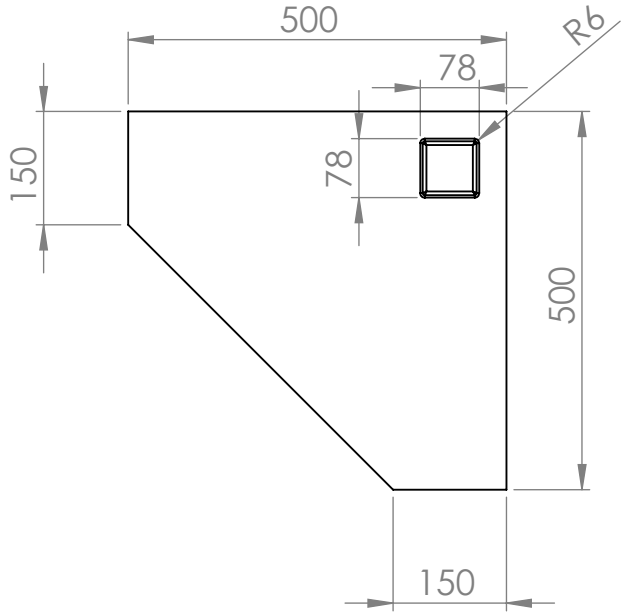

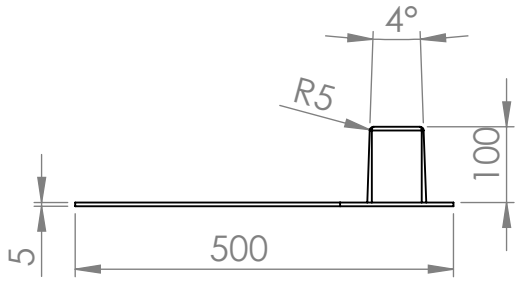

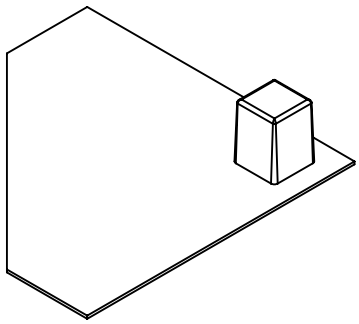

SolidWorks Student Edition.
For Academic Use Only.

TITLE: D10 Mounting Base			
DESIGNER: Production Technology		DATE 2012-05-18	
All dimentions are in millimeter	SCALE: 1:10	SHEET 1 OF 1	A4