SECTION A-A
SCALE 1 : 20

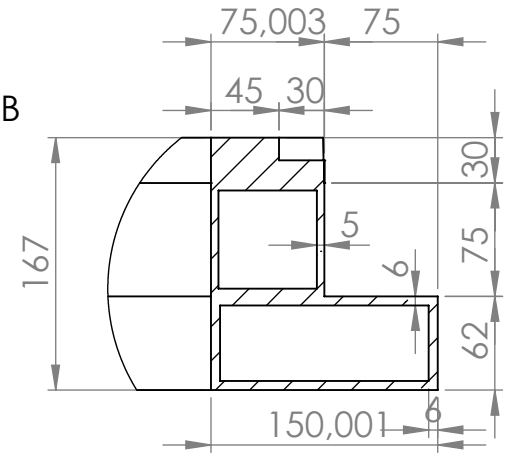

DETAIL B
SCALE 1 : 5

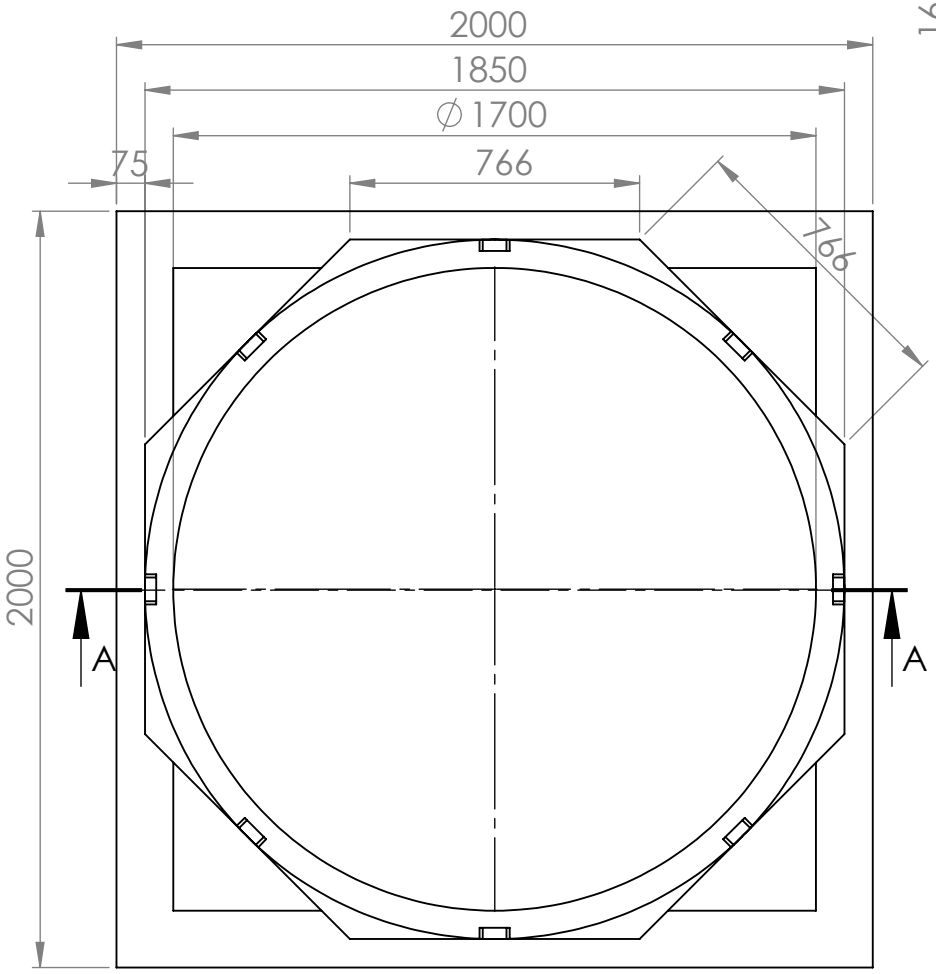

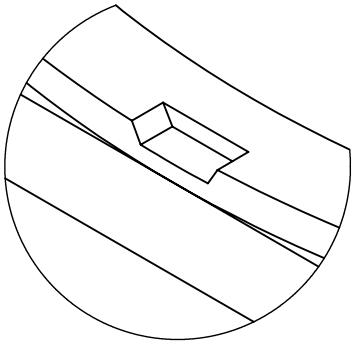

DETAIL D
SCALE 1 : 5

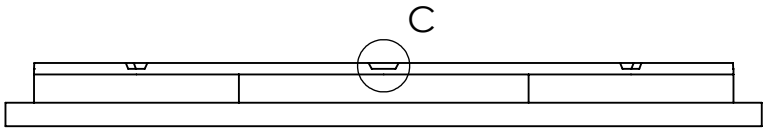

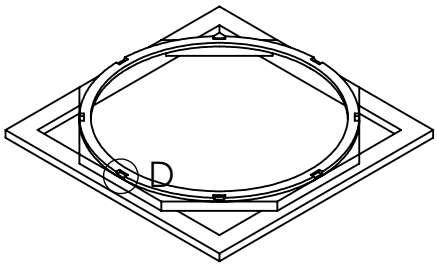

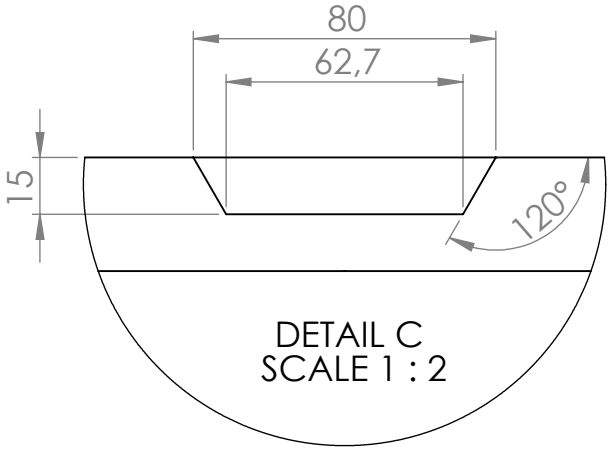

DETAIL C
SCALE 1 : 2

SolidWorks Student Edition.
For Academic Use Only.

TITLE: D02 Jig Top Frame			
DESIGNER: Production Technology		DATE 2012-05-18	
All dimentions are in millimeter	SCALE: 1: 20	SHEET 1 OF 1	A4